

12

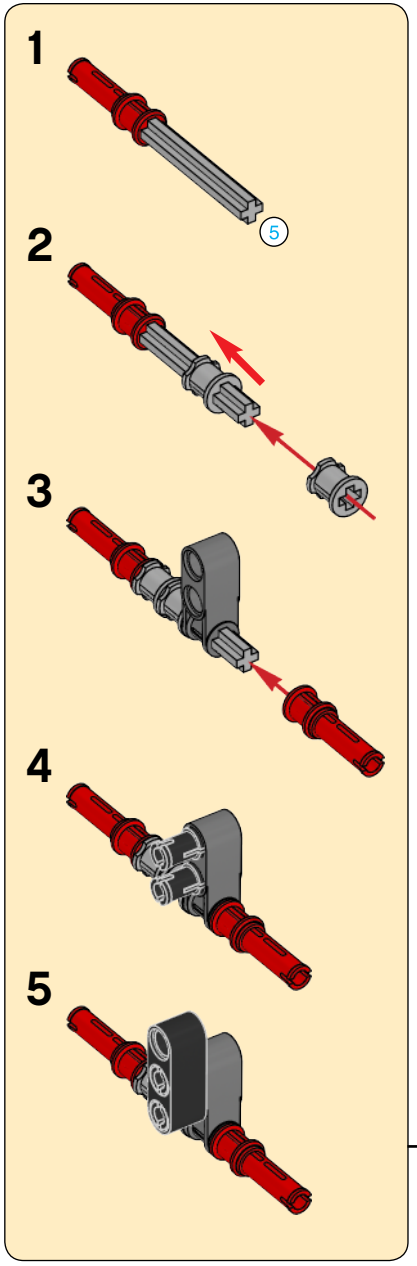

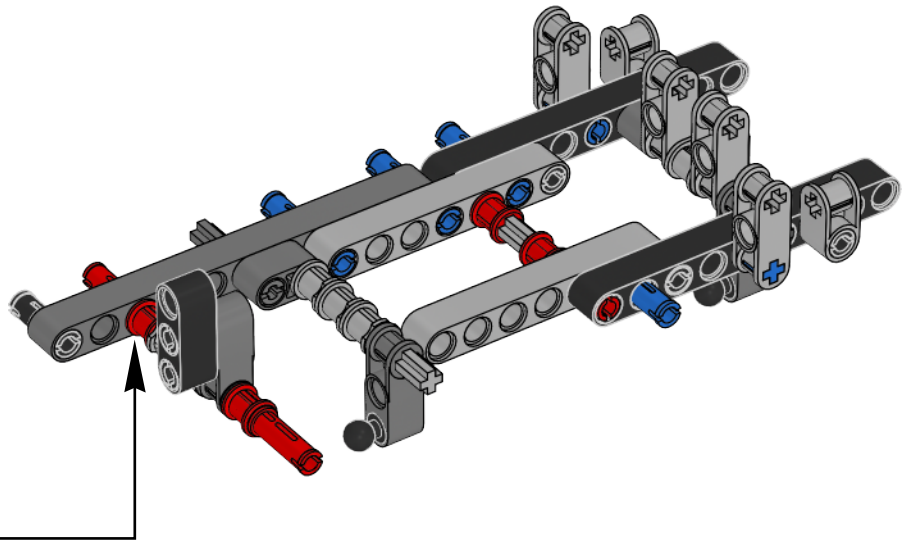

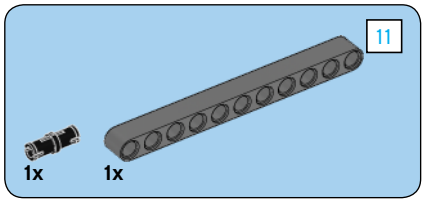

13

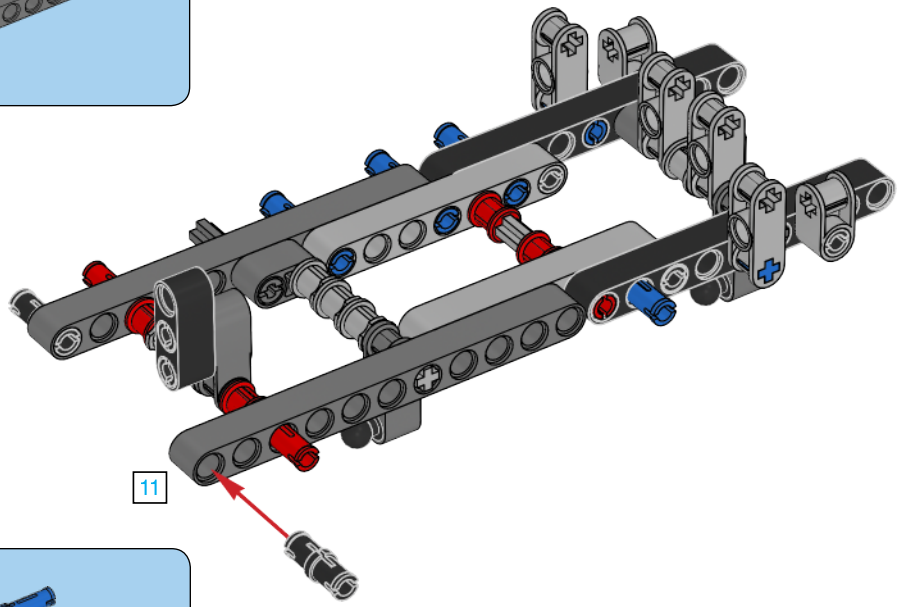

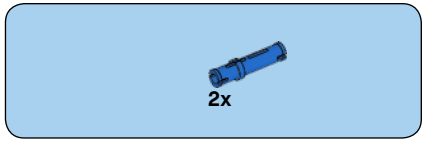

14

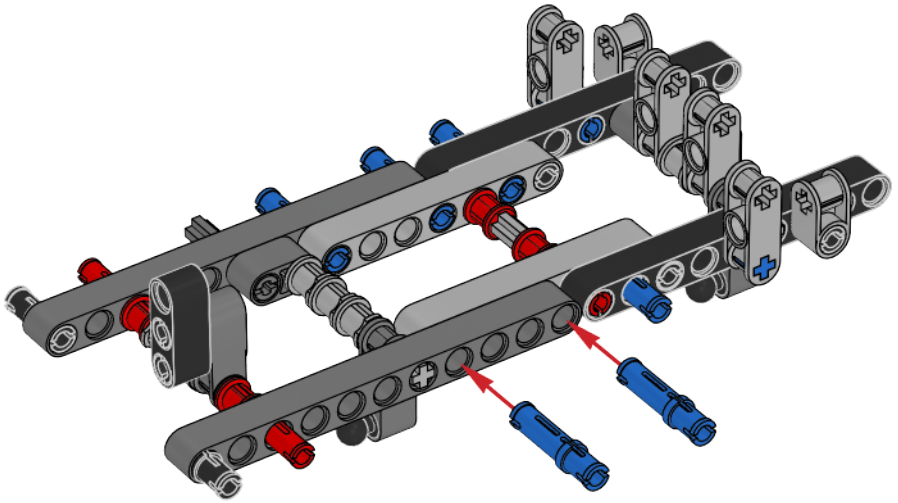

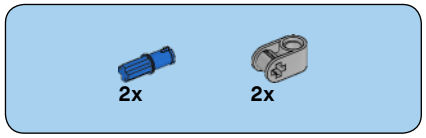

15

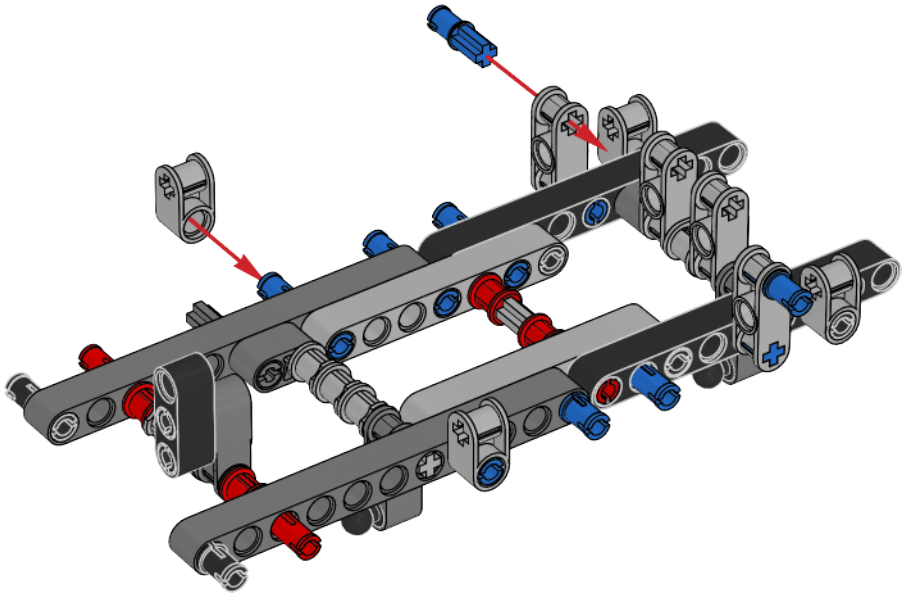

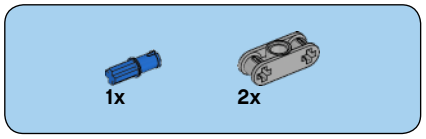

16

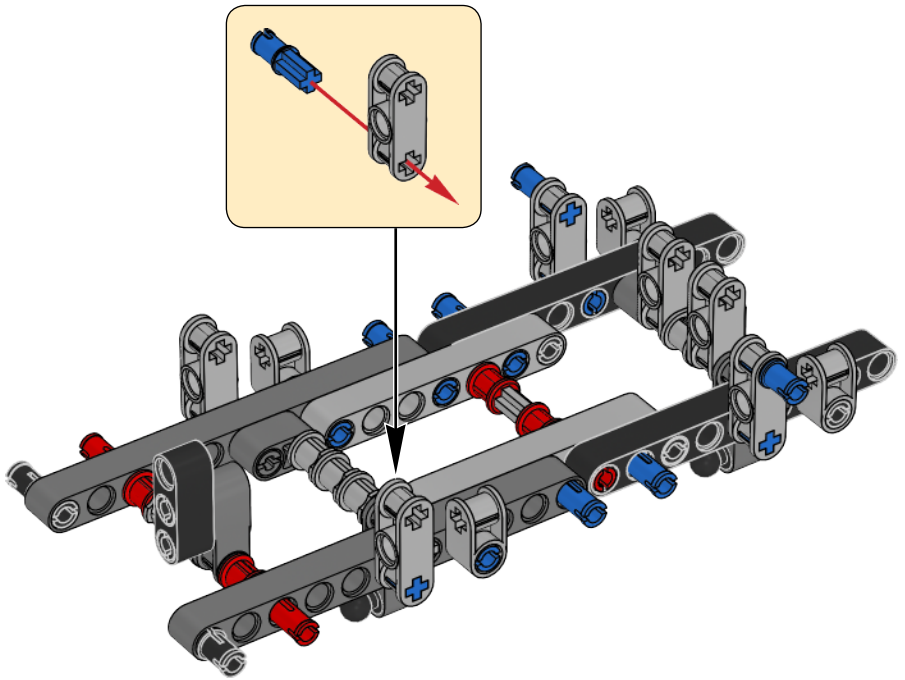

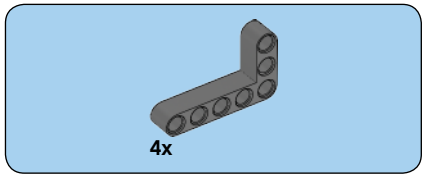

17

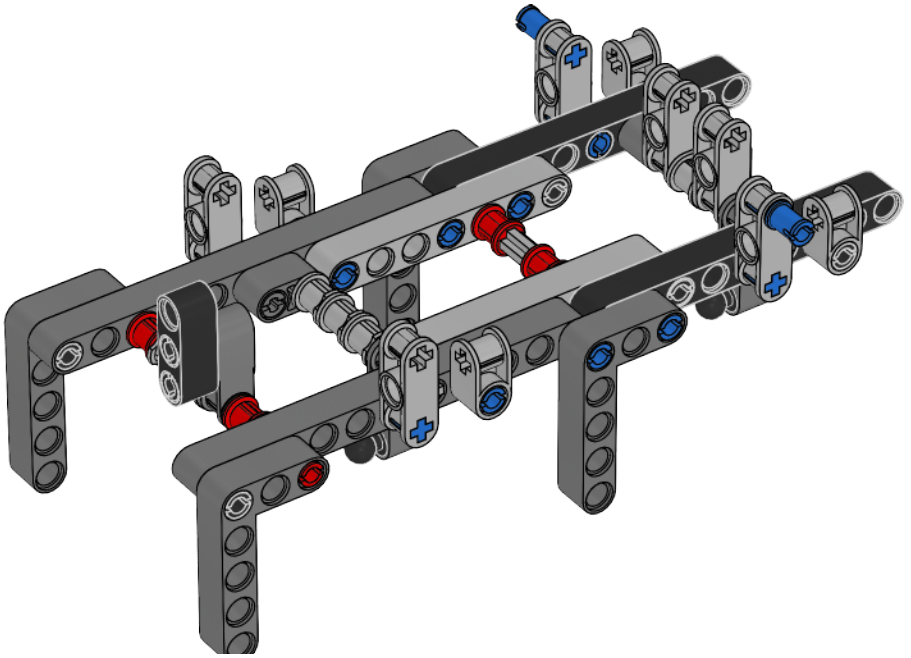

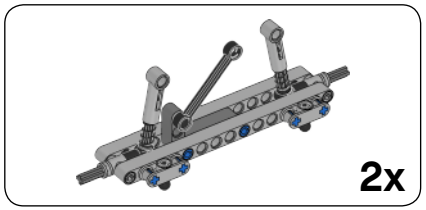

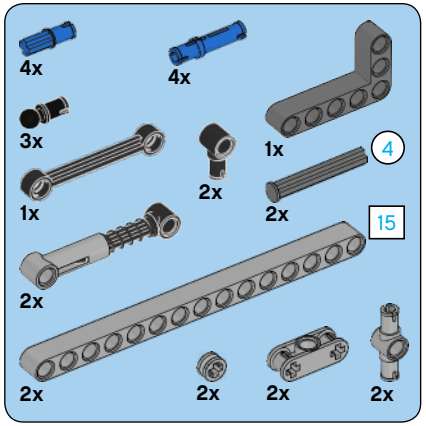

18

1

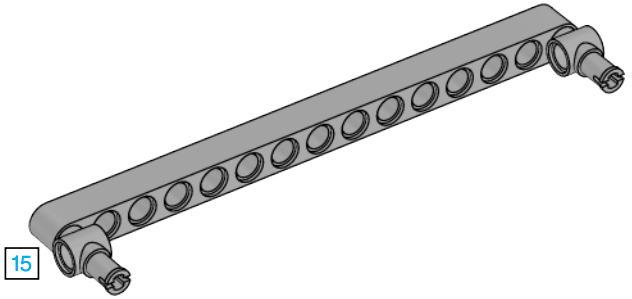

2

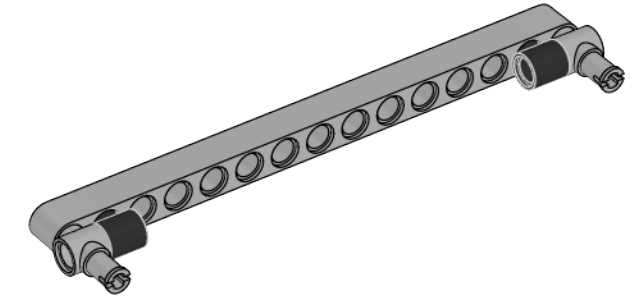

3

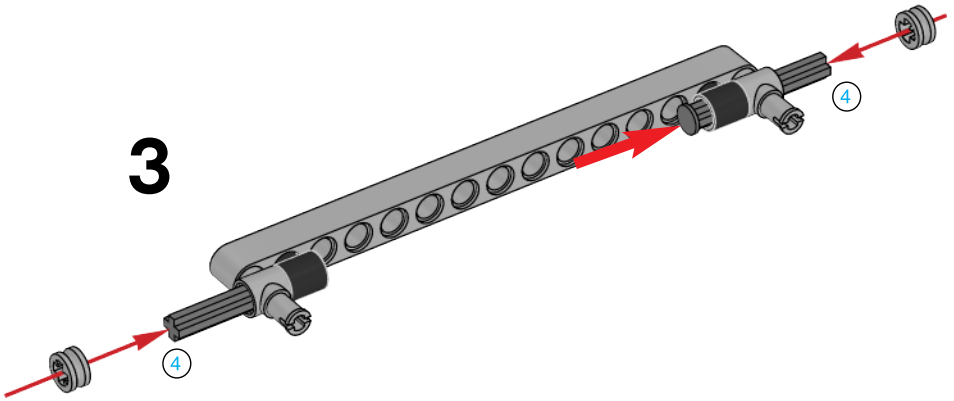

4

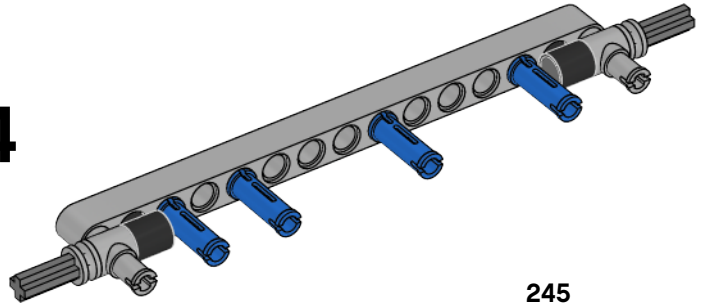

5

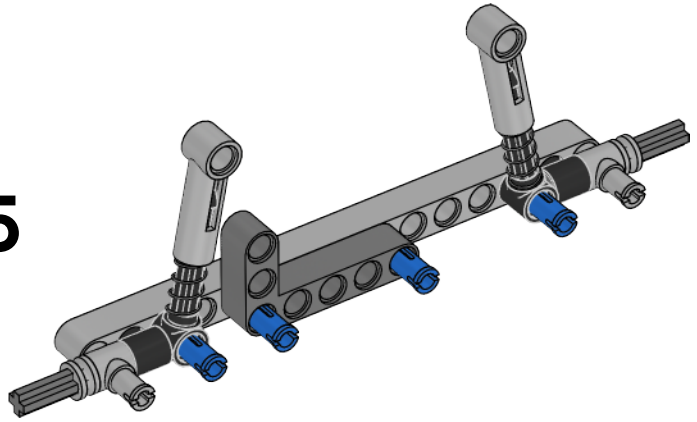

6

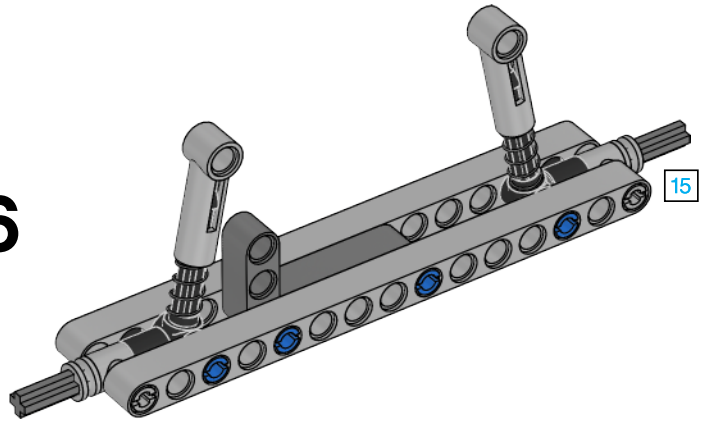

15

7

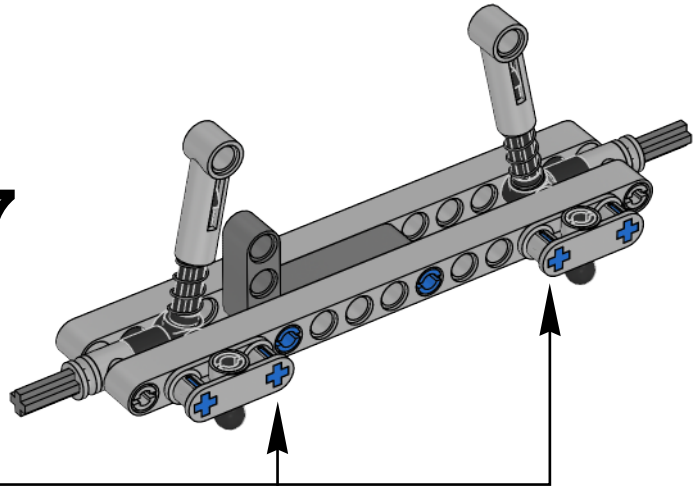

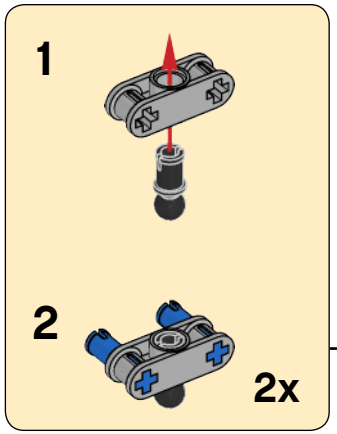

8

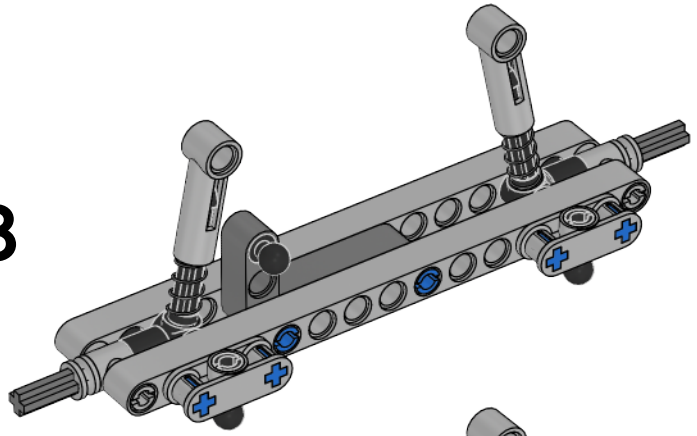

9

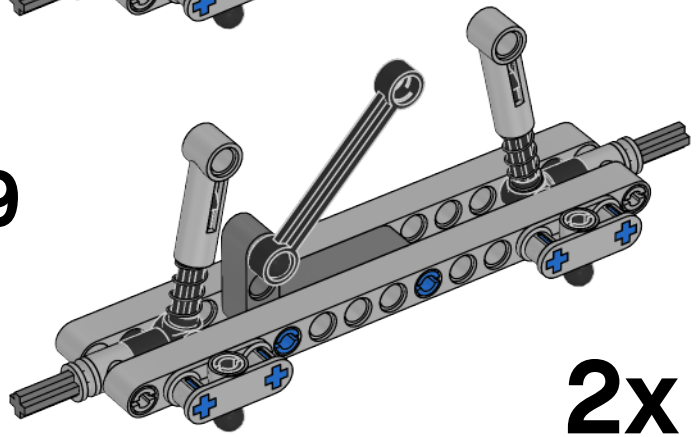

2x

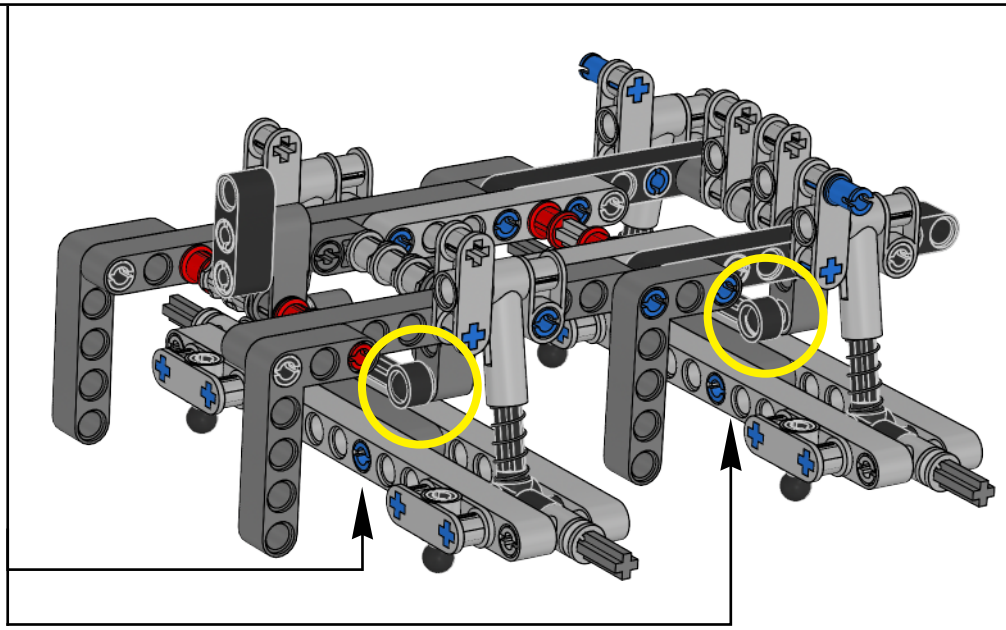

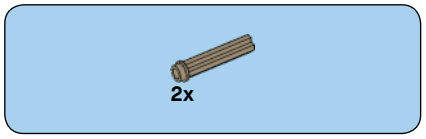

19

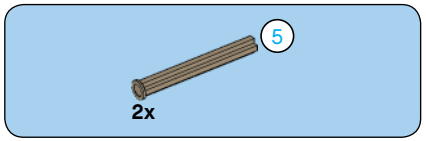

20

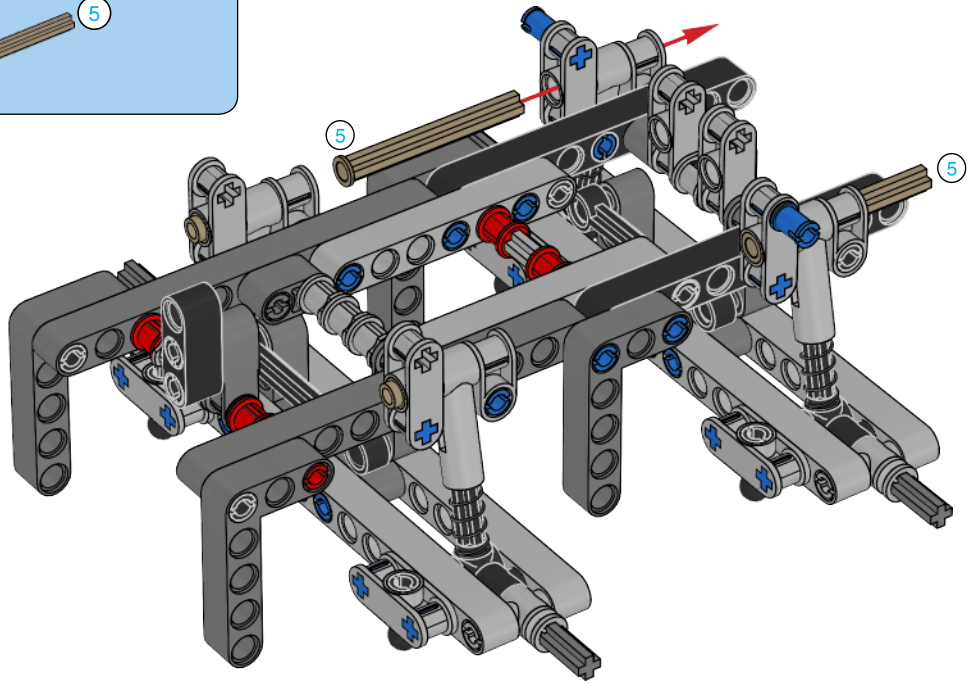

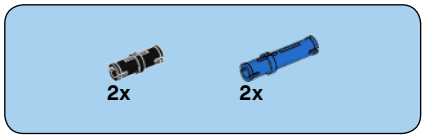

21

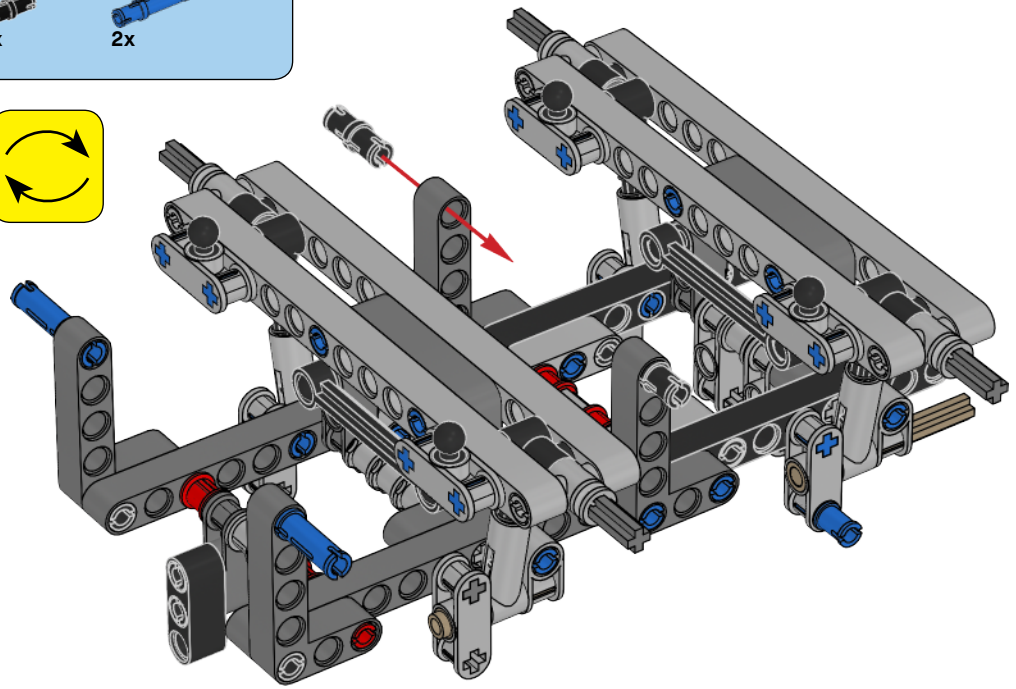

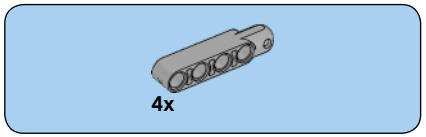

22

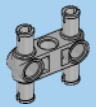

23

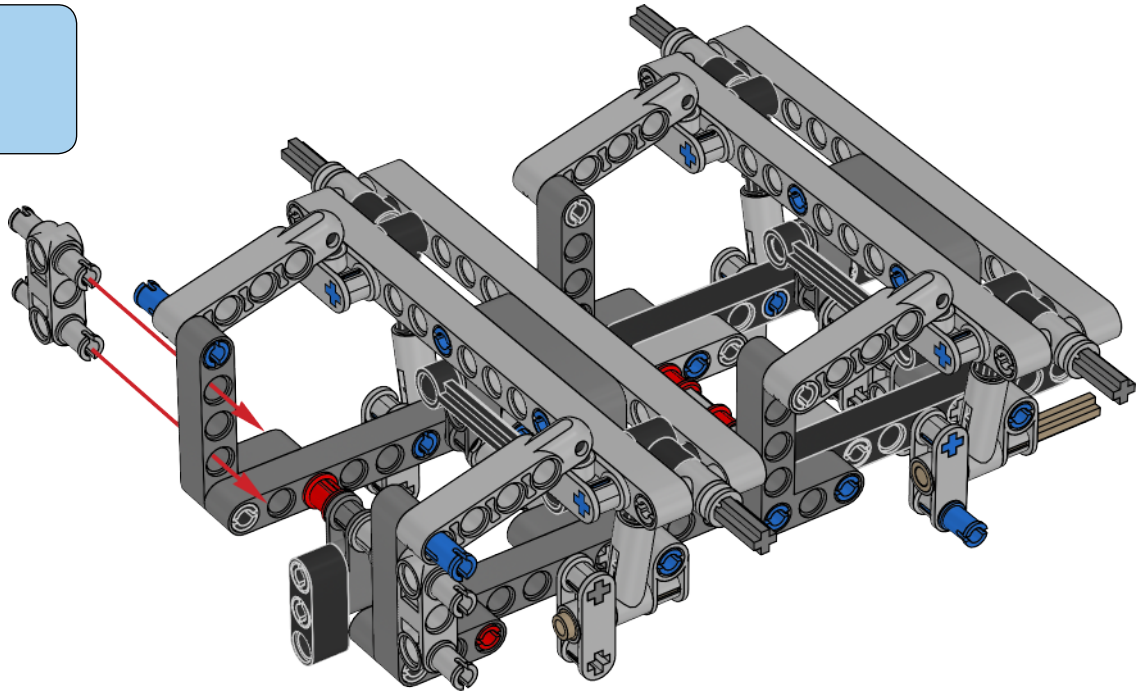

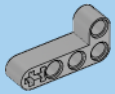

24

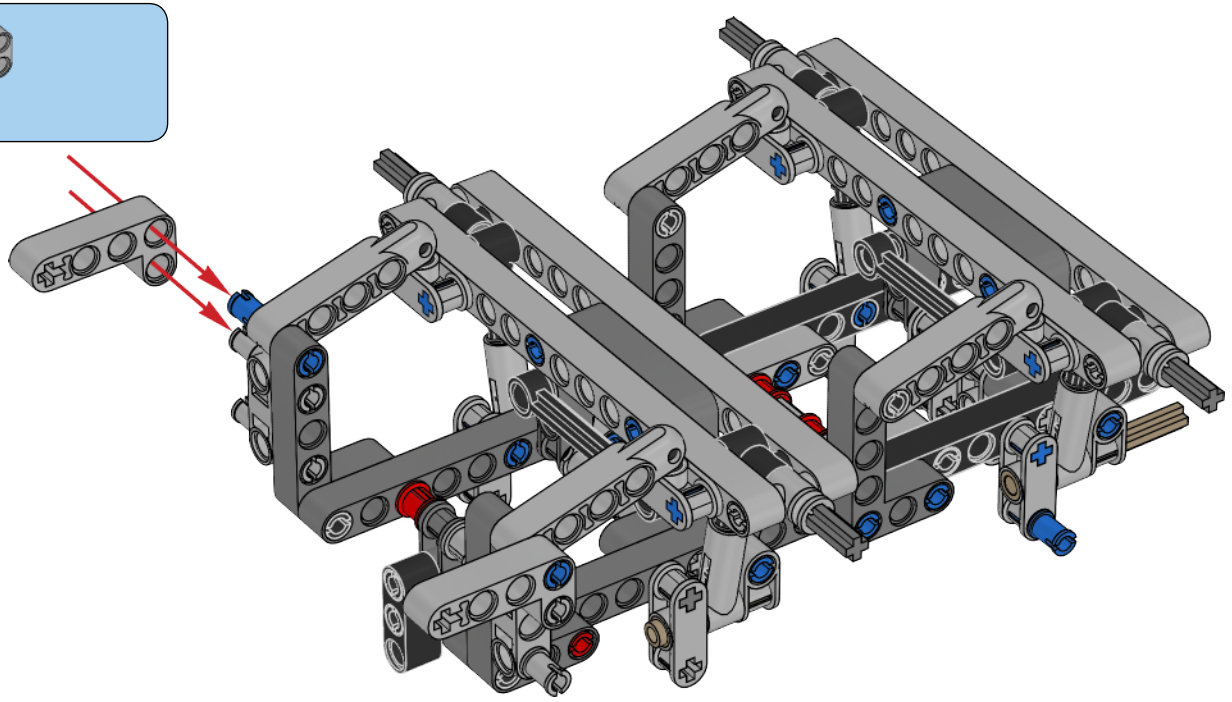

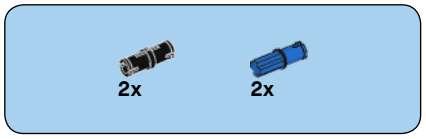

25

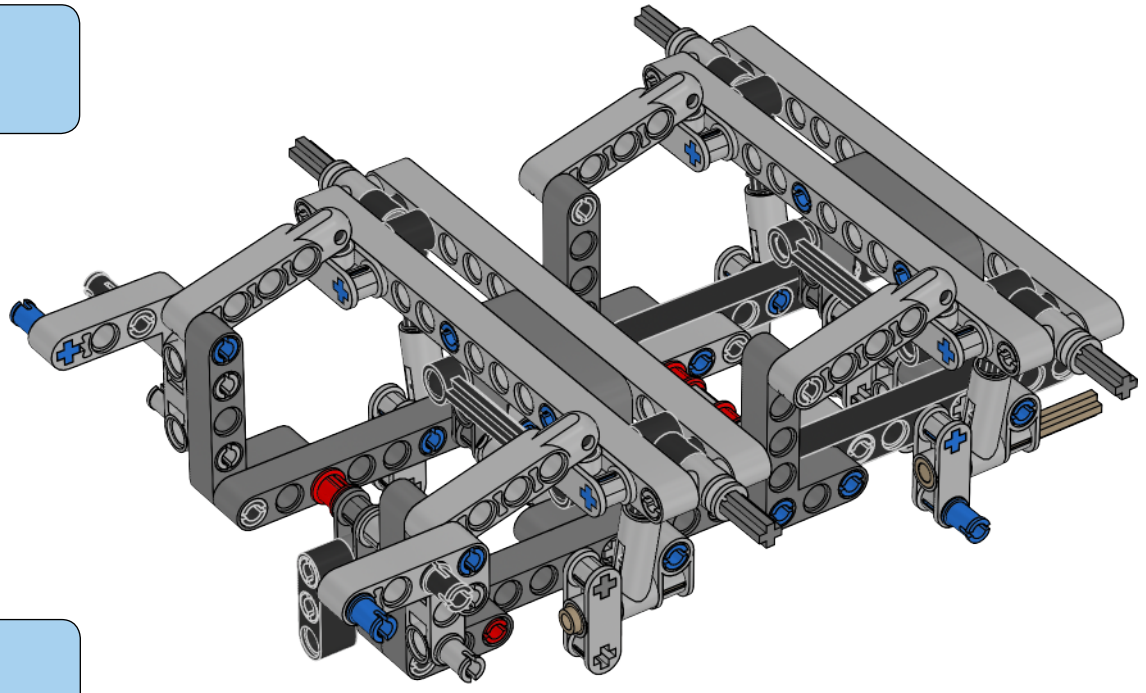

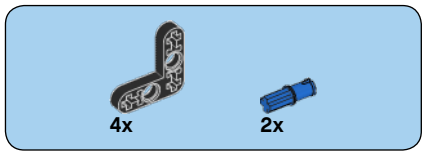

26

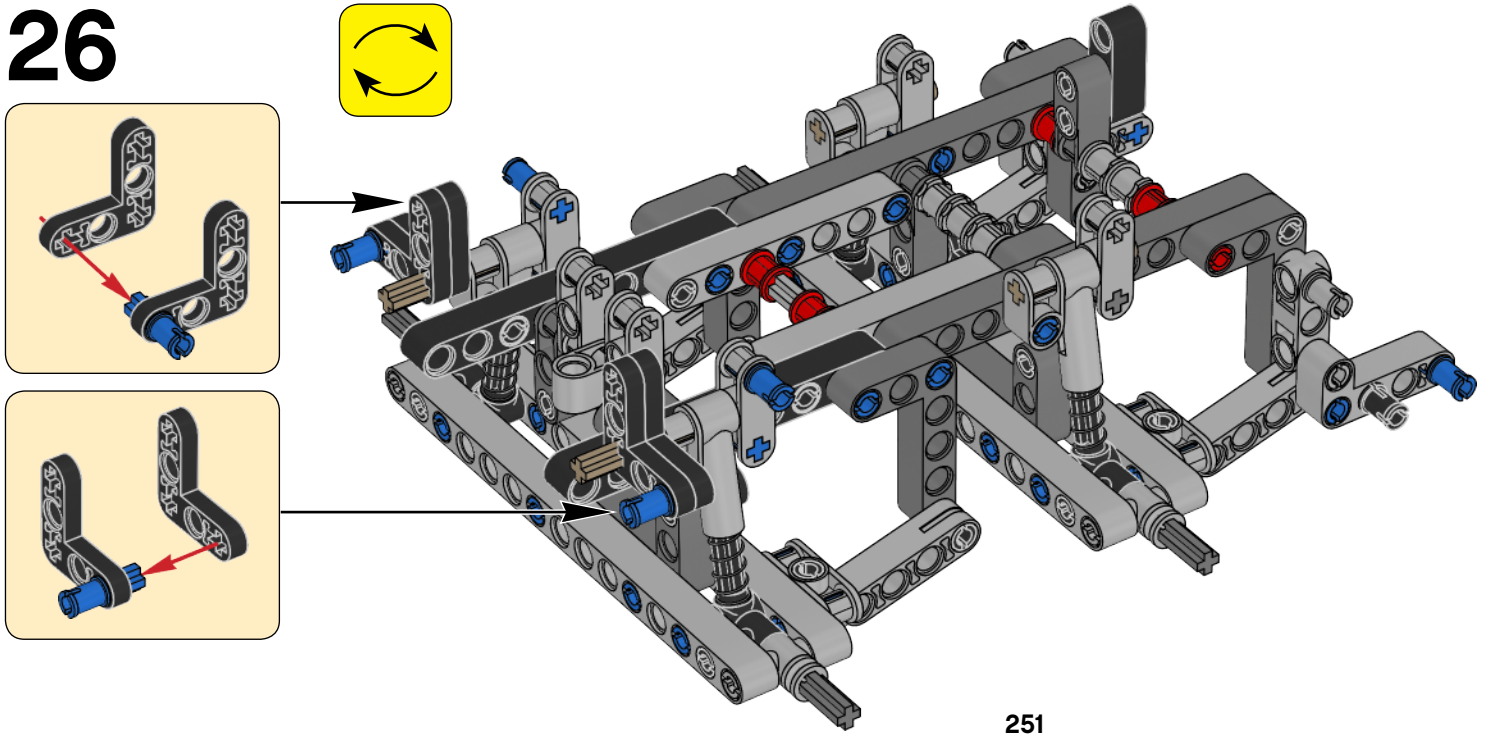

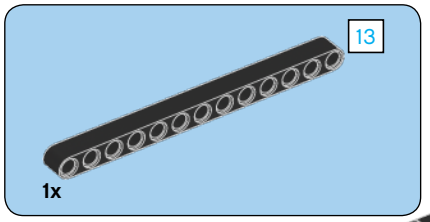

27

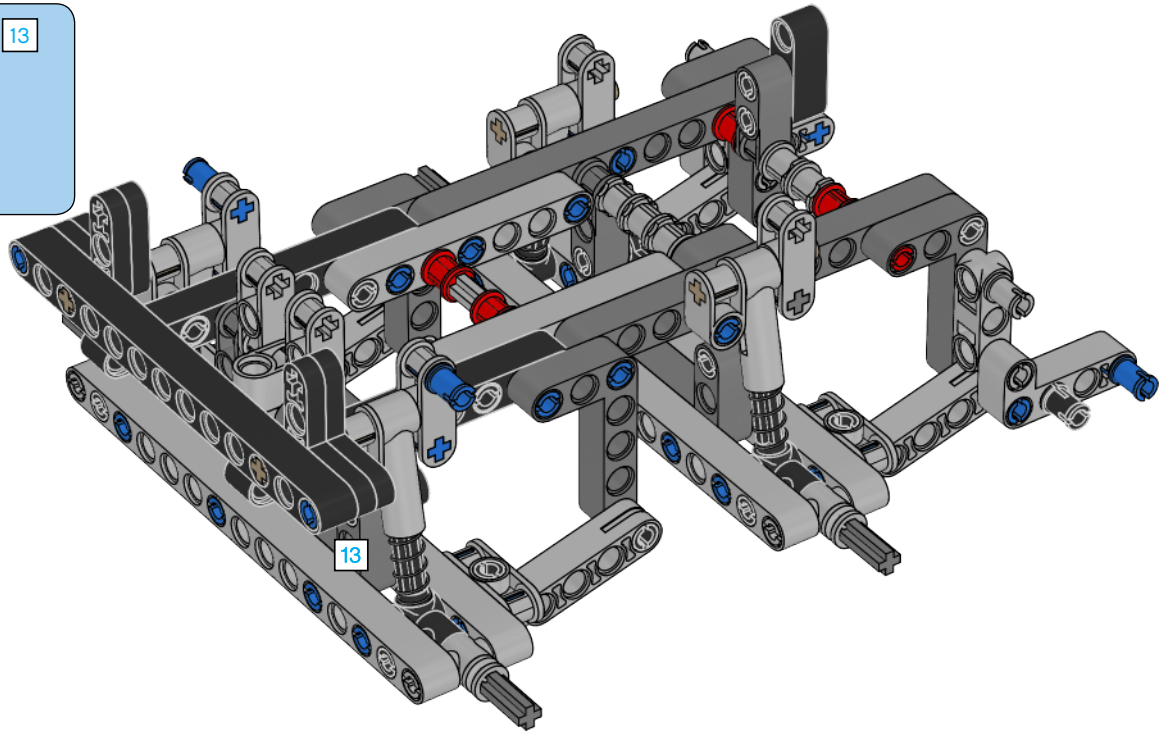

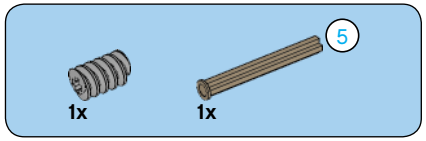

28

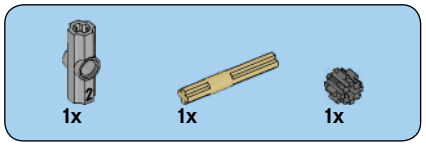

29

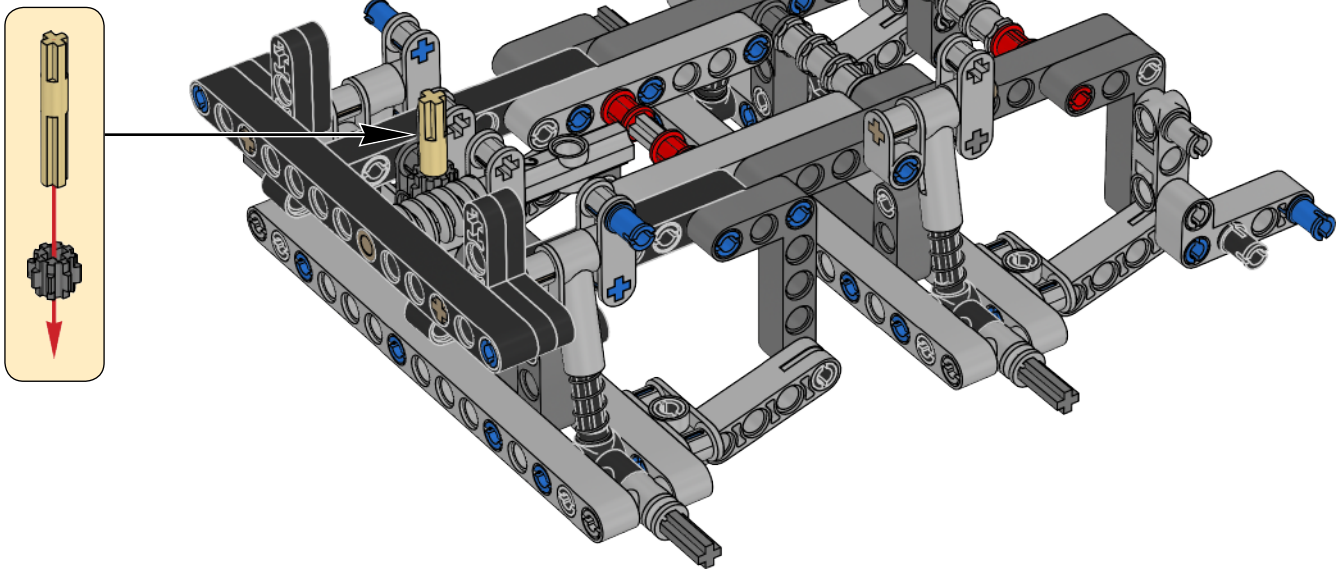

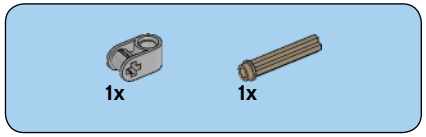

30

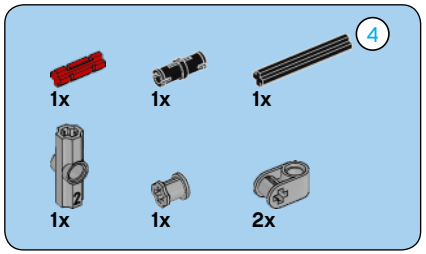

31

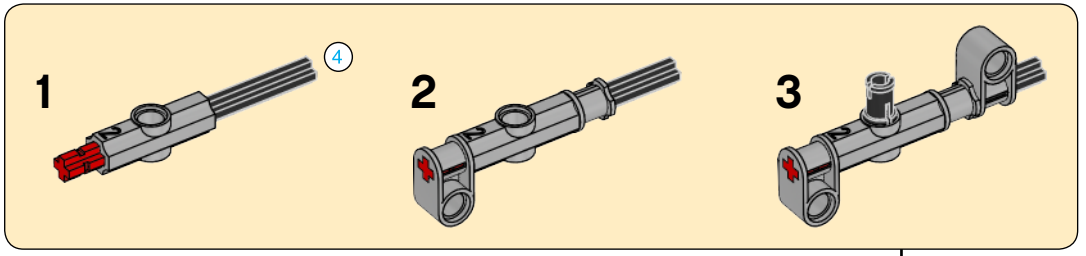

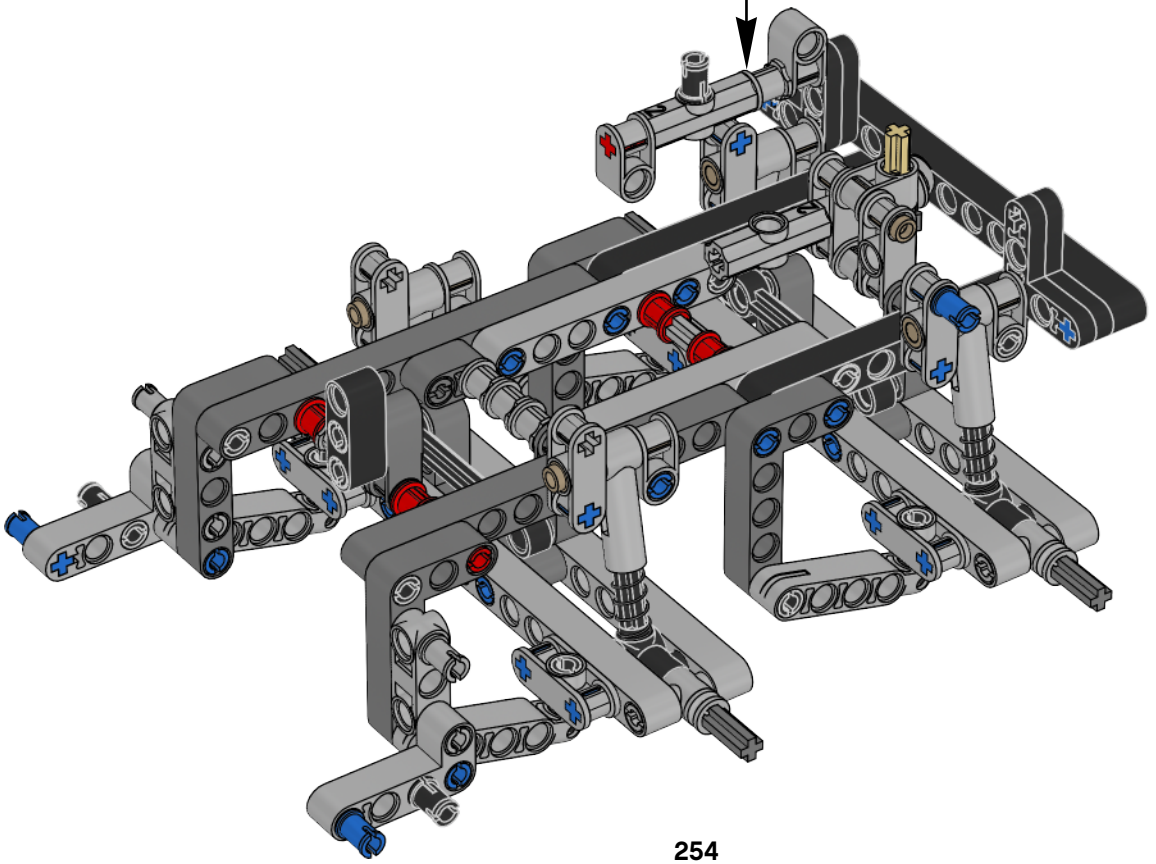

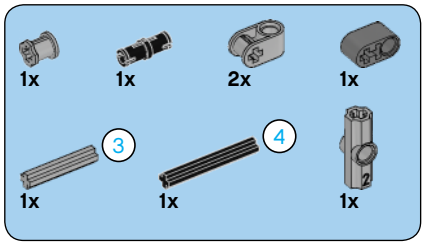

32

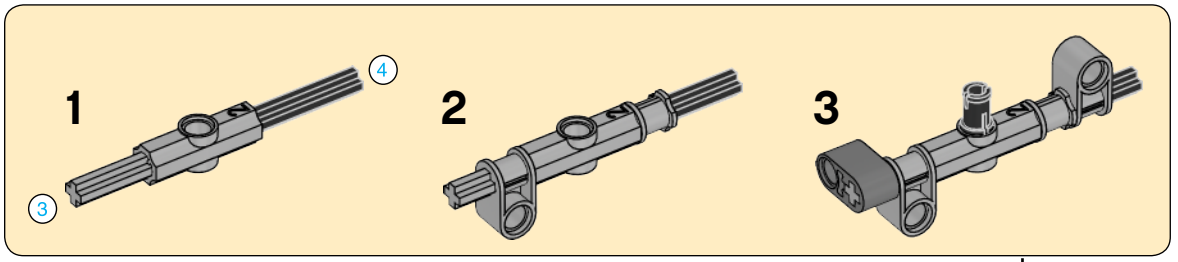

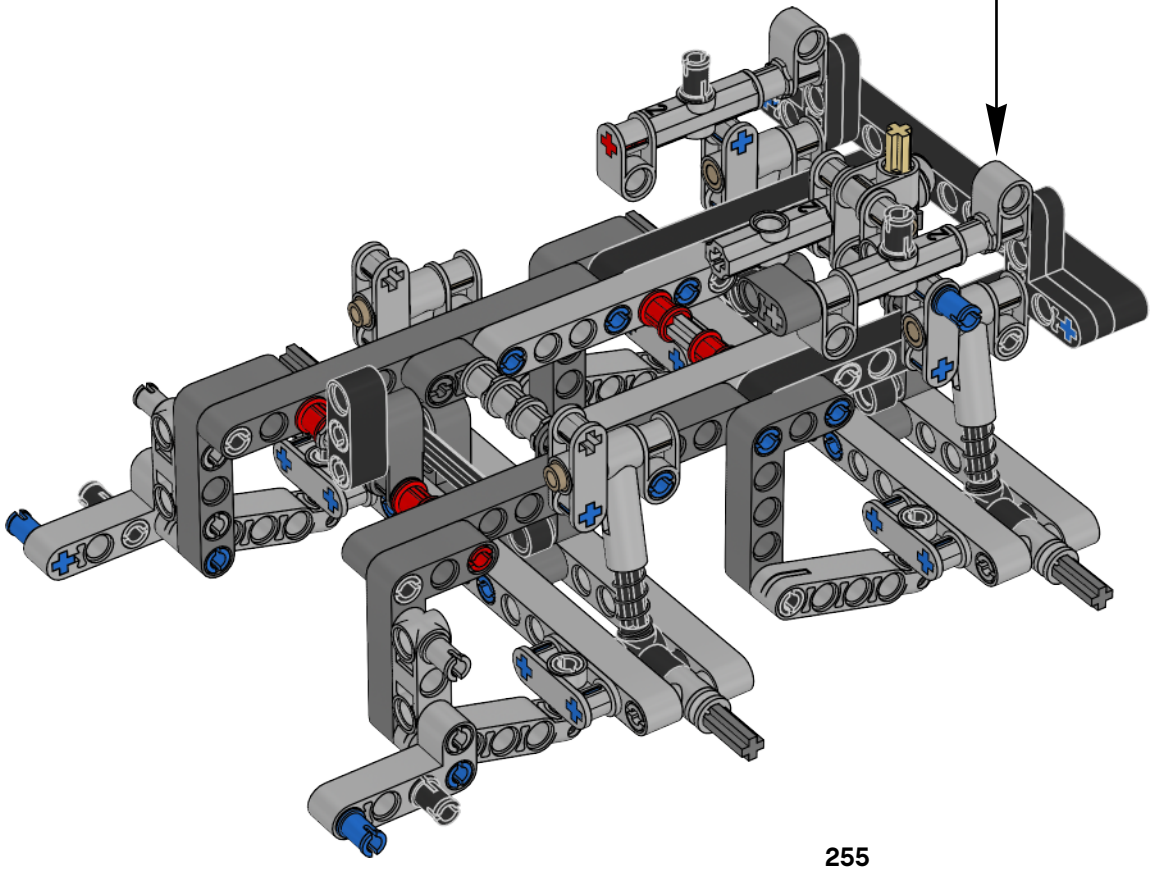



33

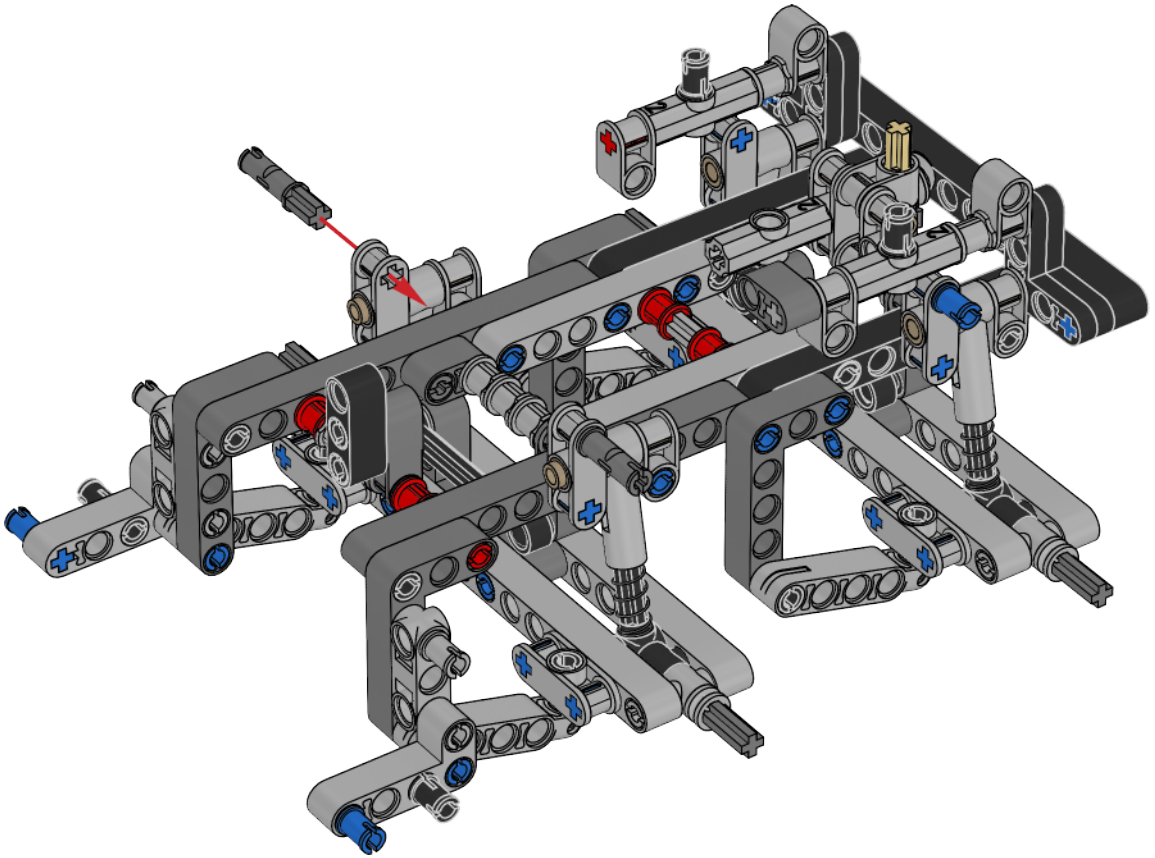

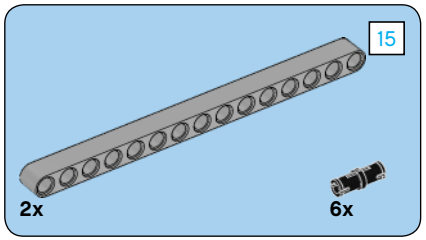

34

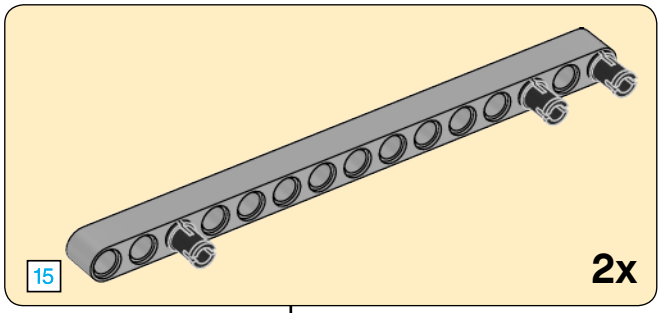

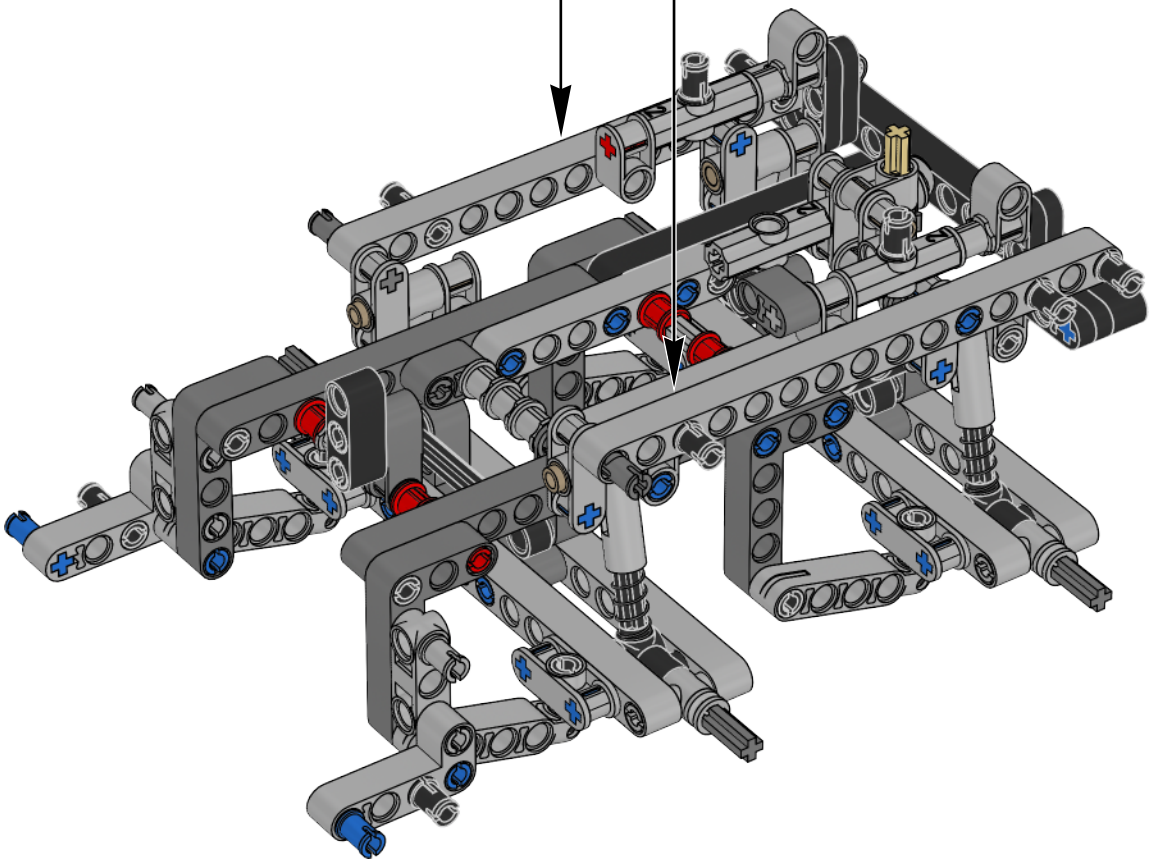

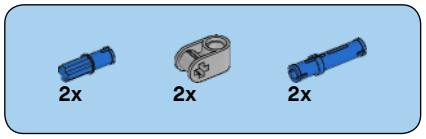

35

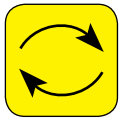

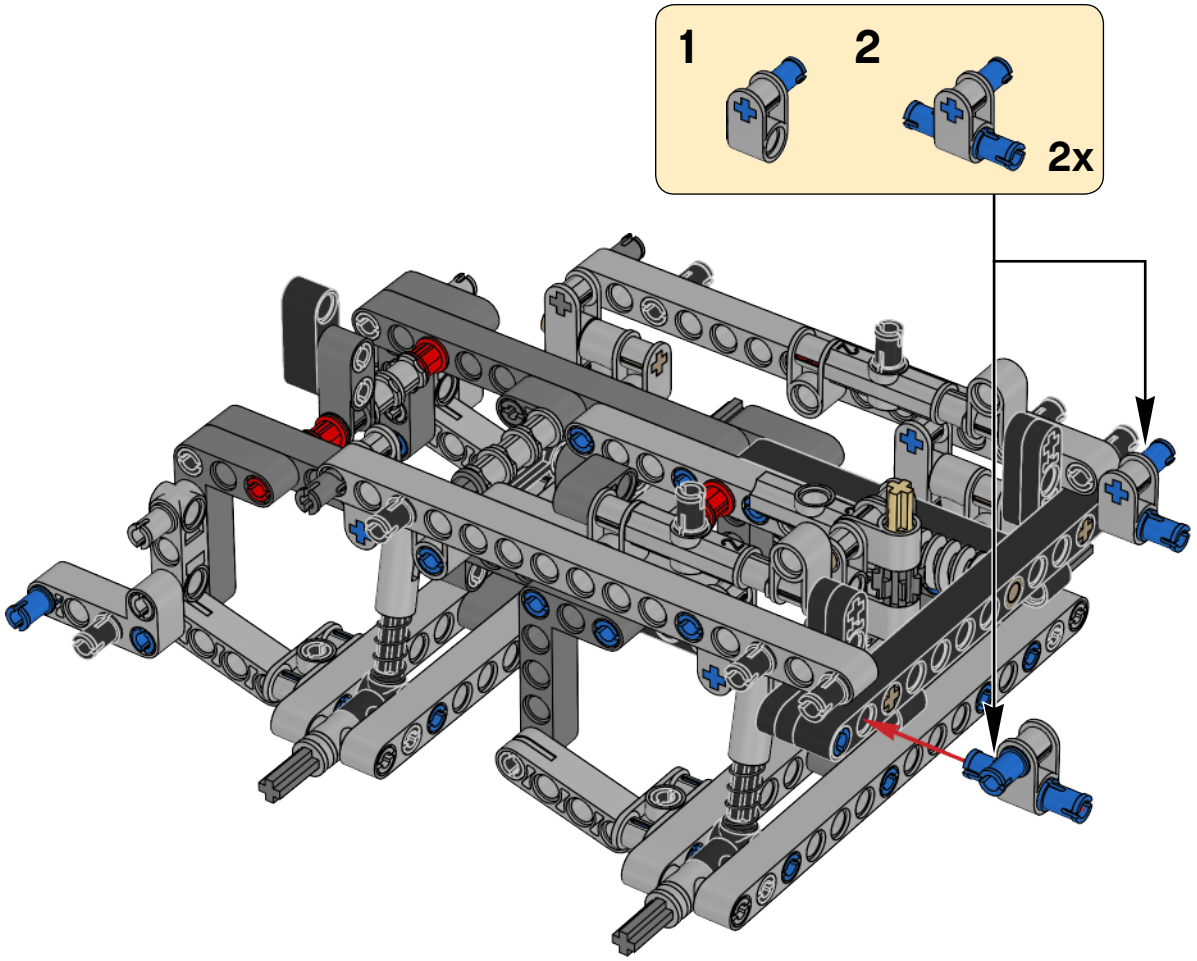

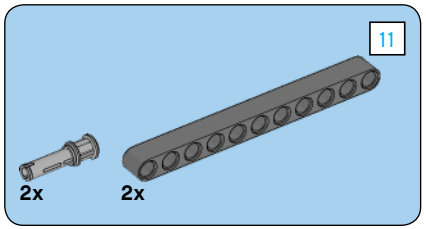

36

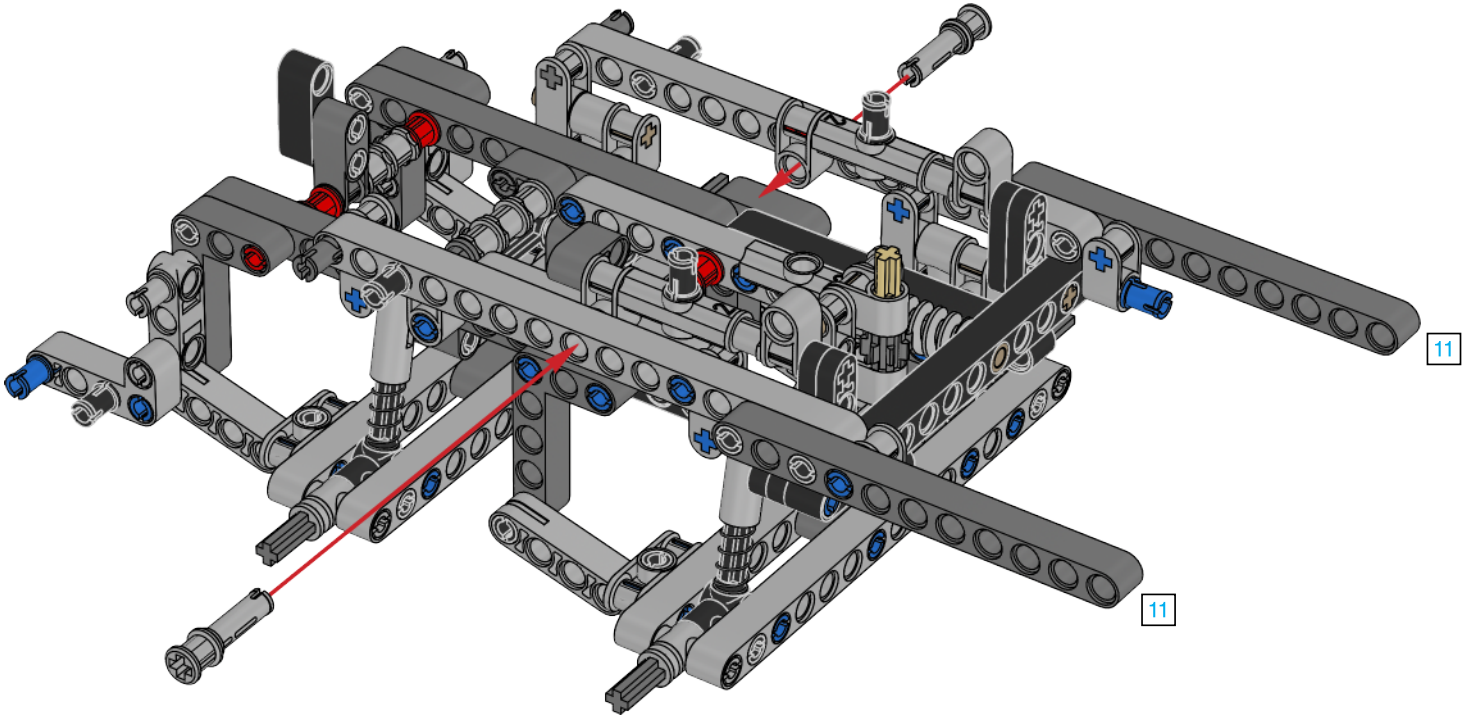

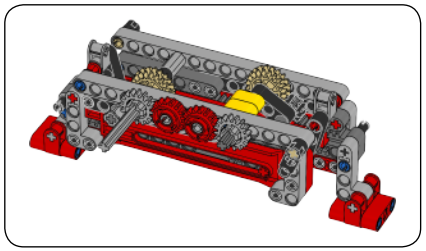

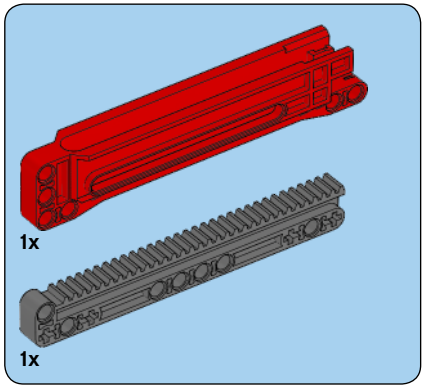

1

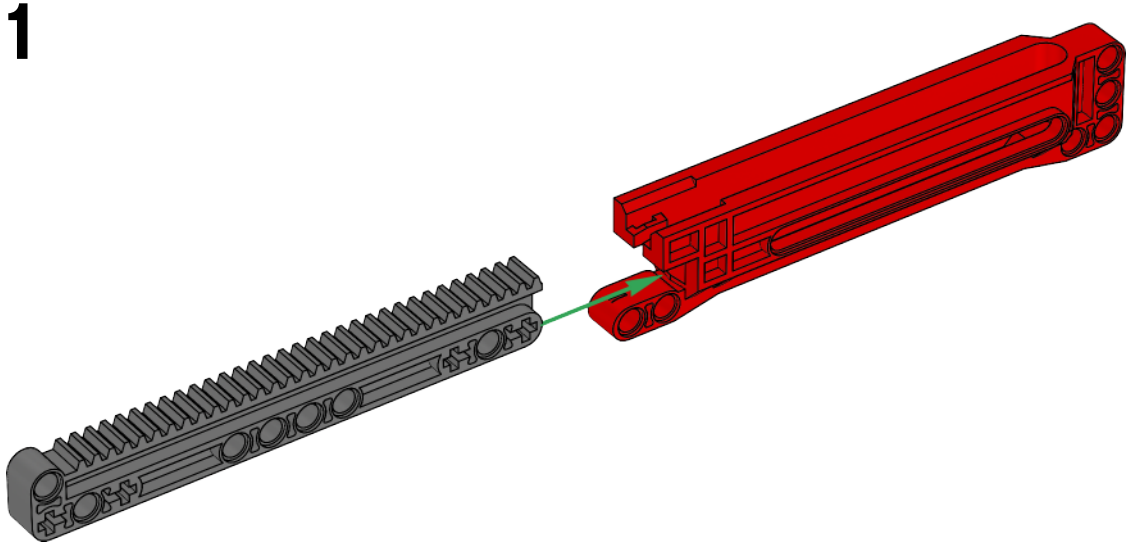

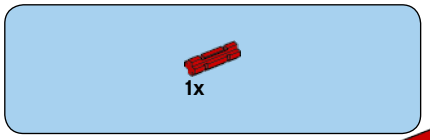

2

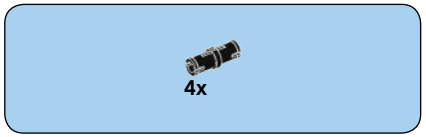

3

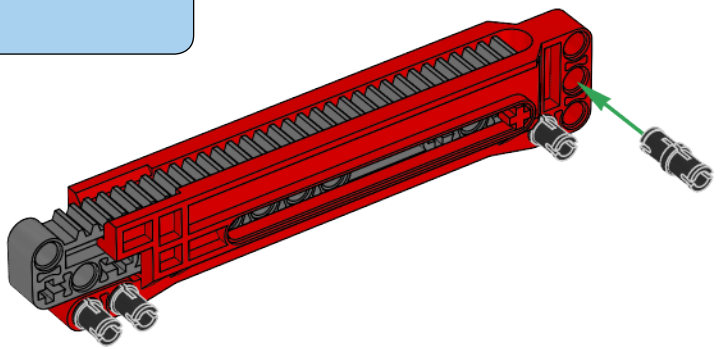

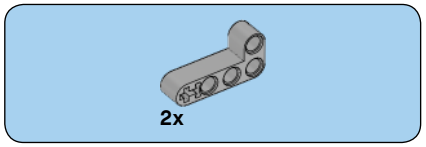

4

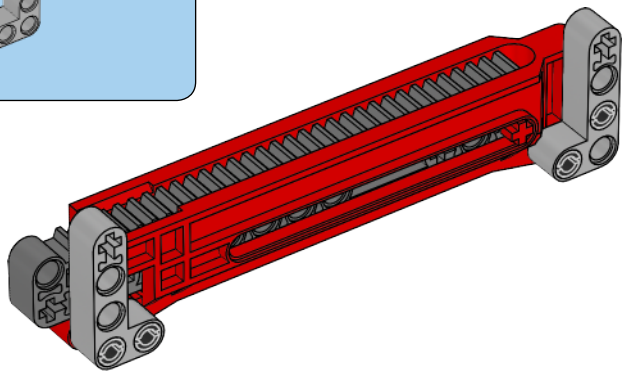

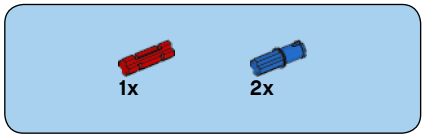

5

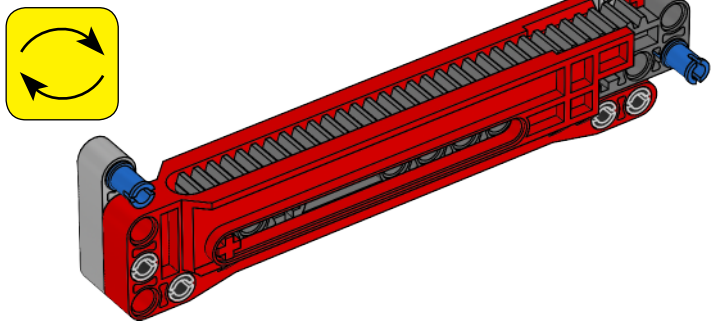

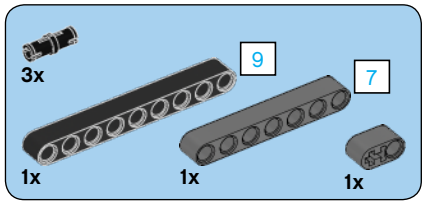

6

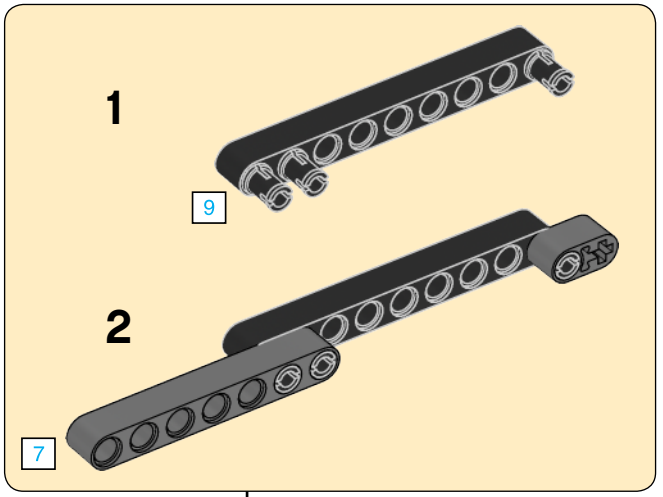

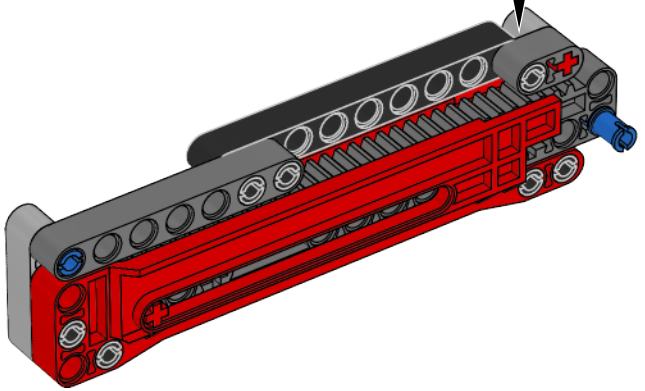

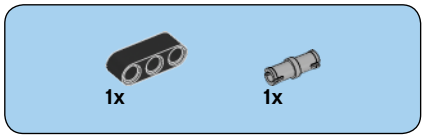

7

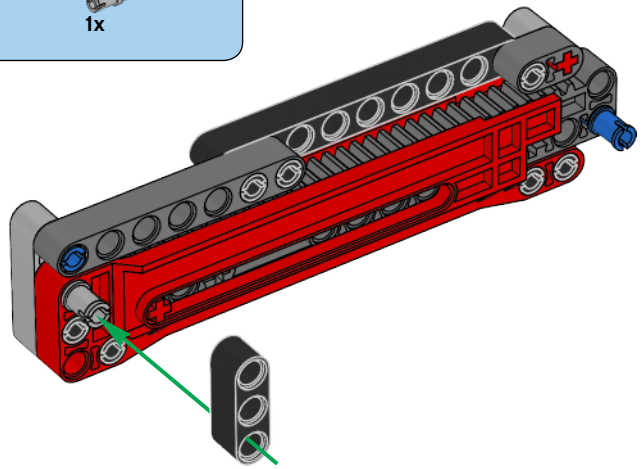

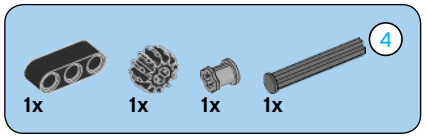

8

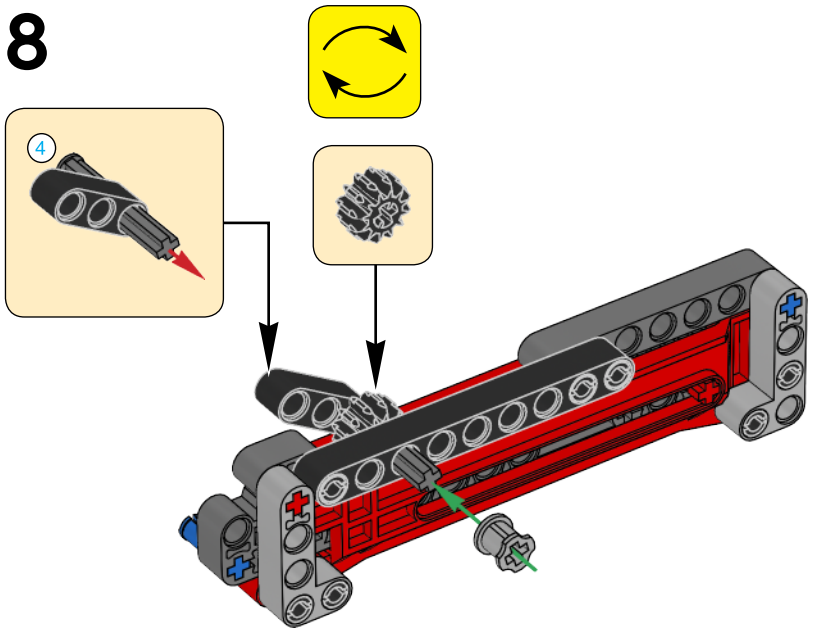

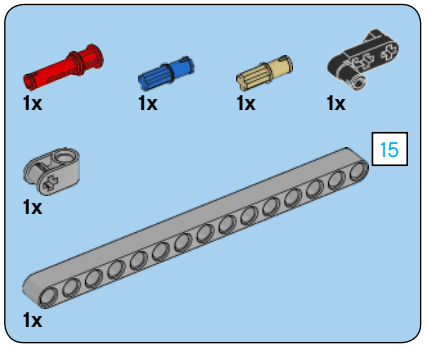

9

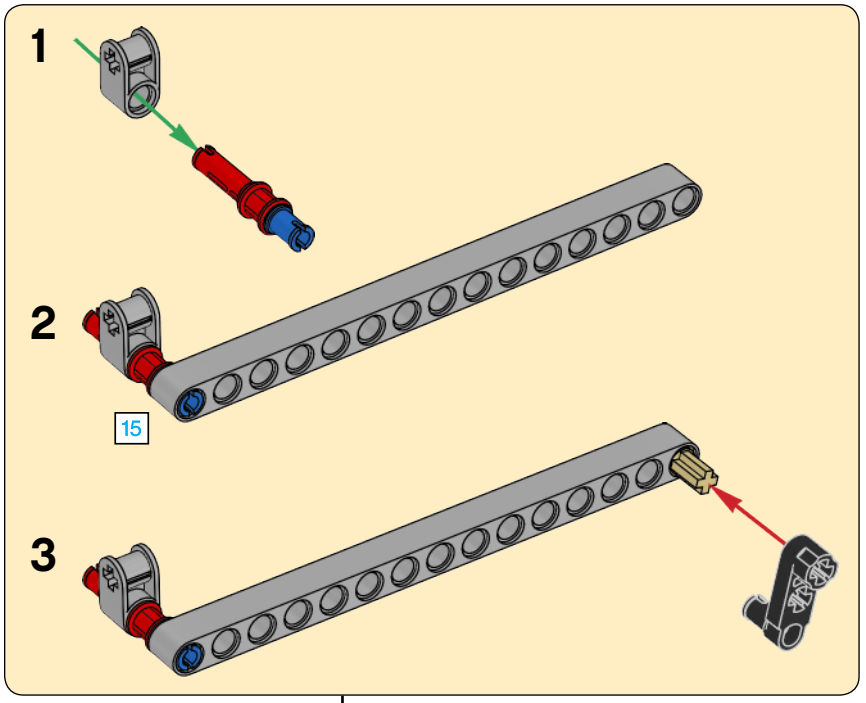

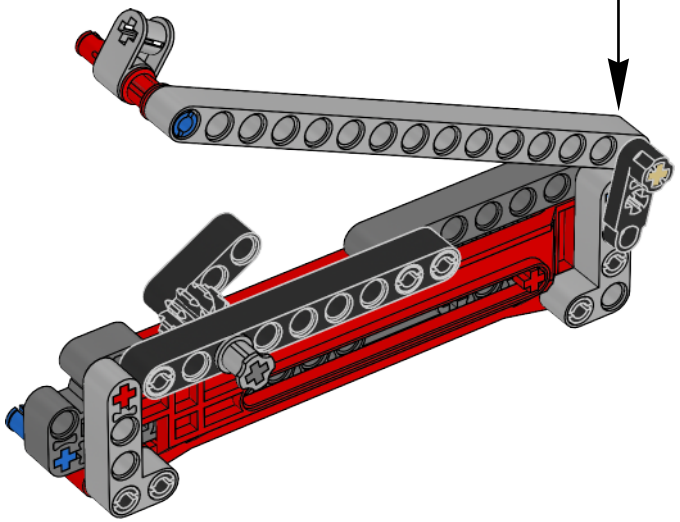

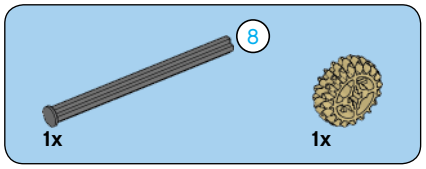

10

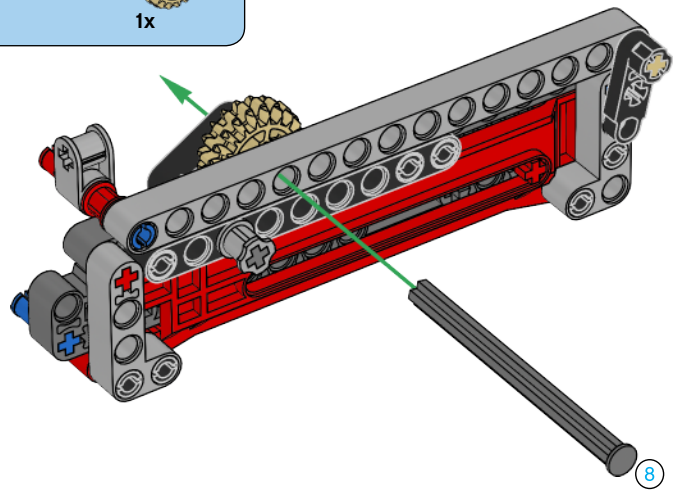

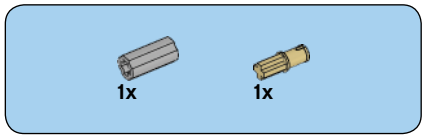

11

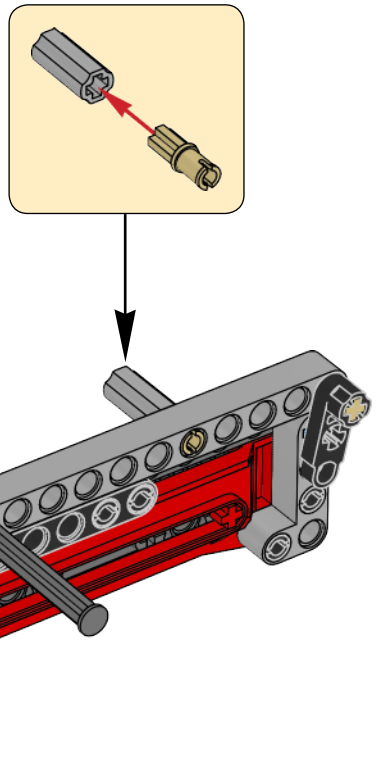

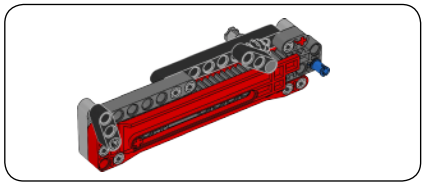

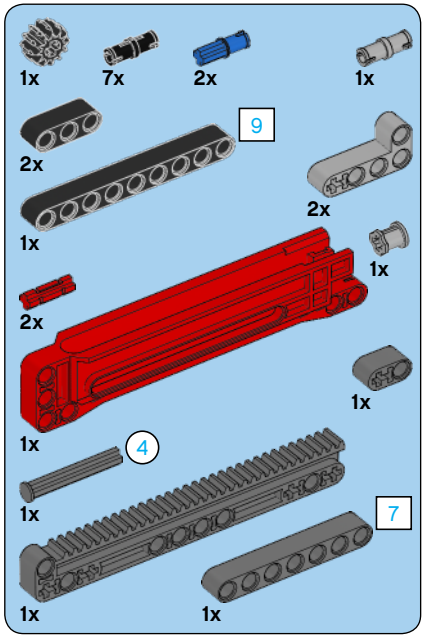

12

1

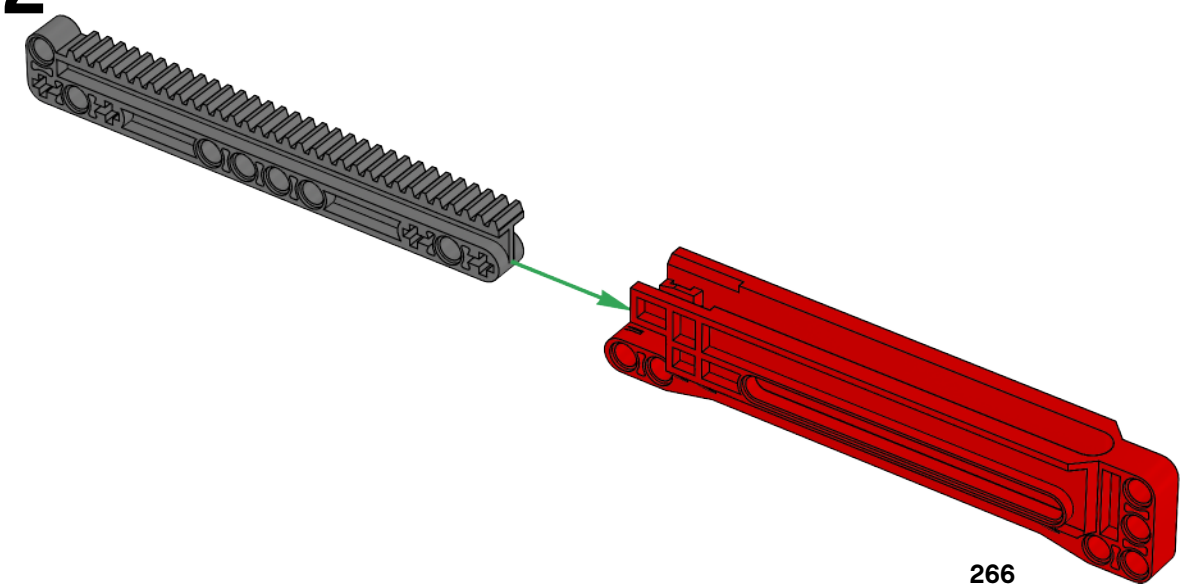

2

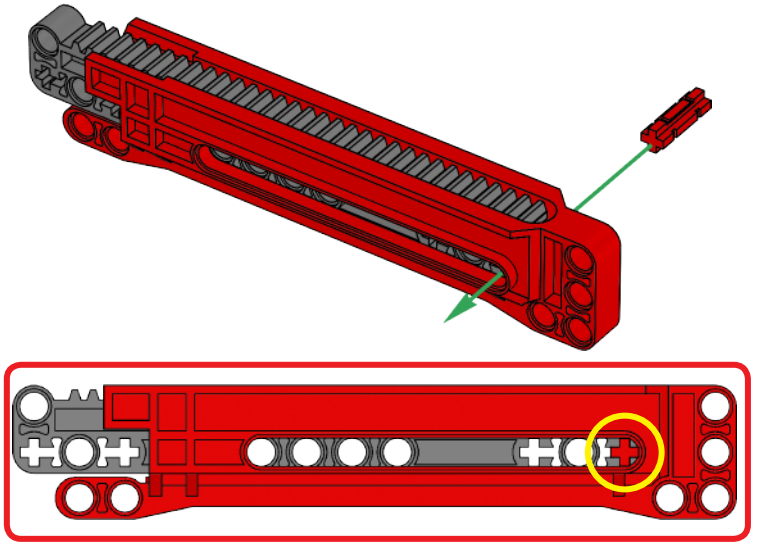

3

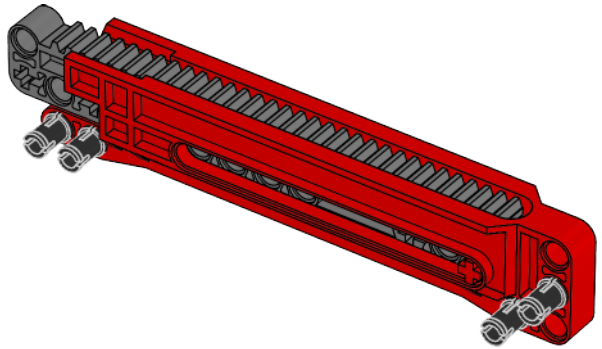

4

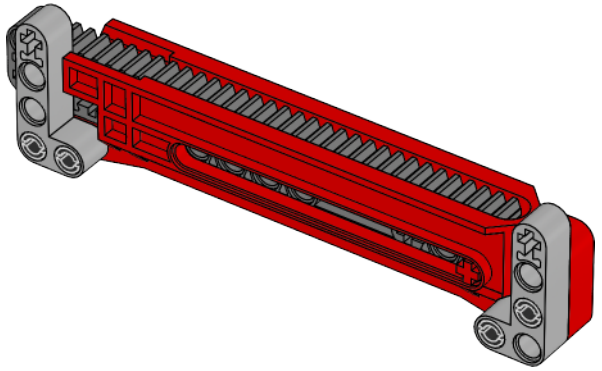

5

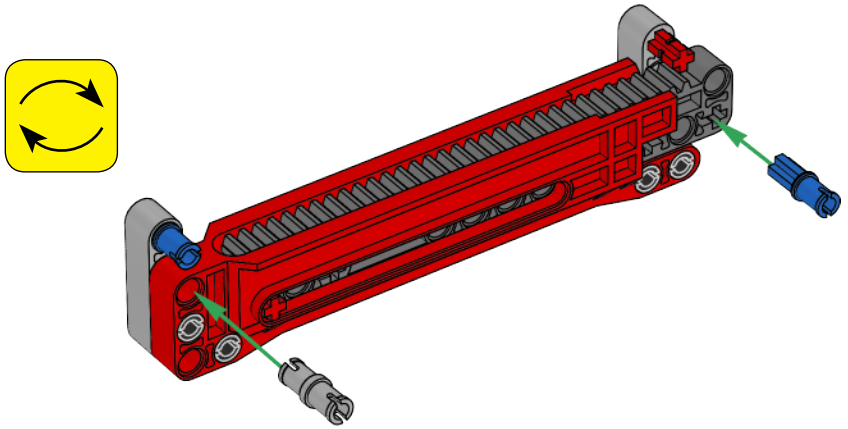

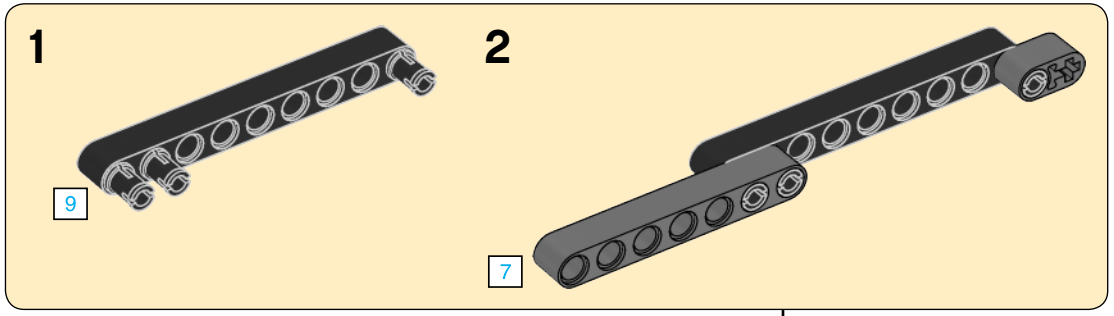

6

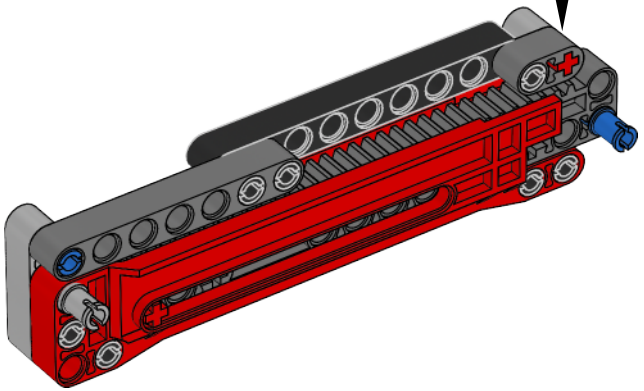

7

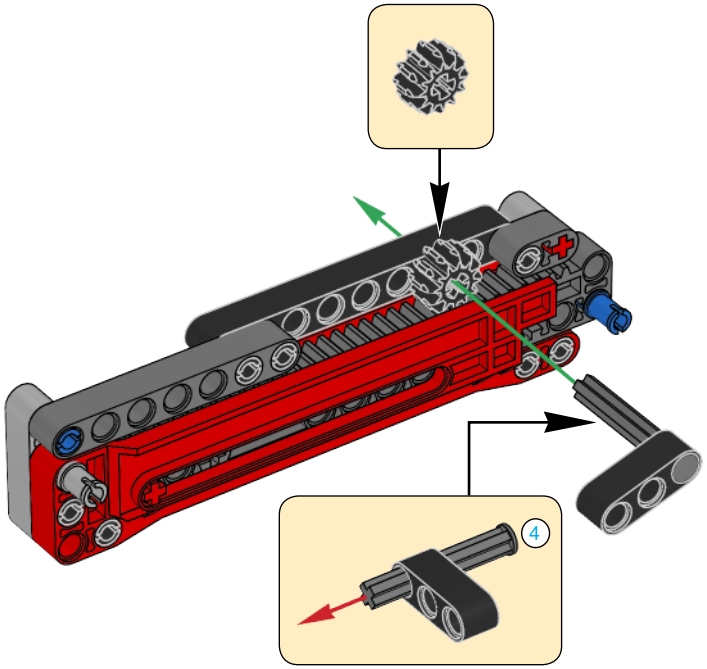

8

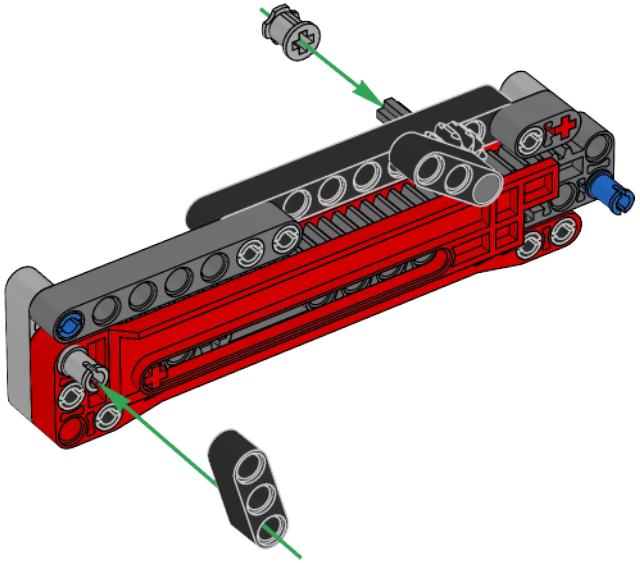

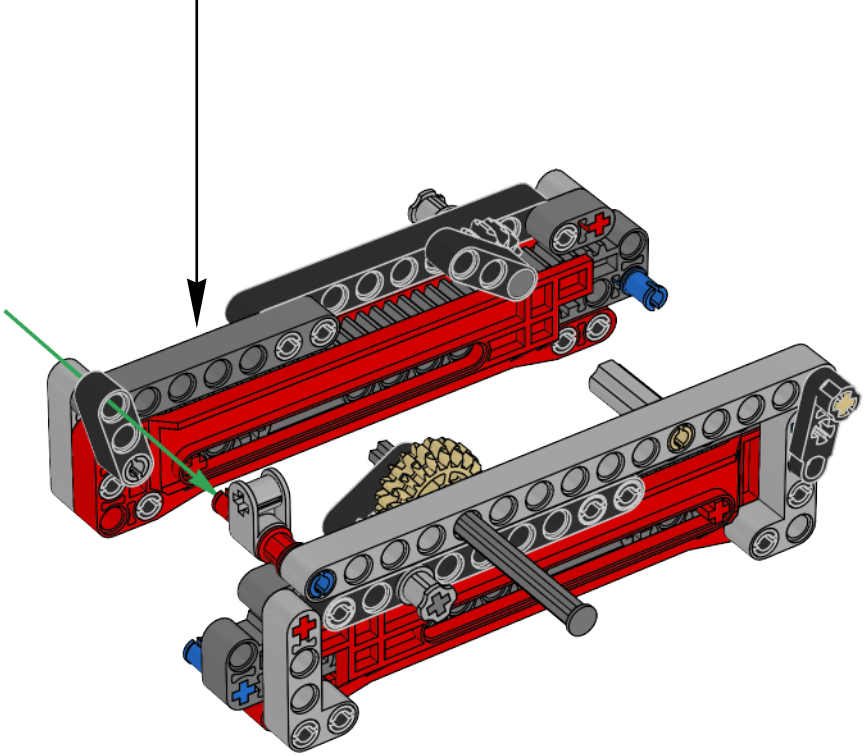

13

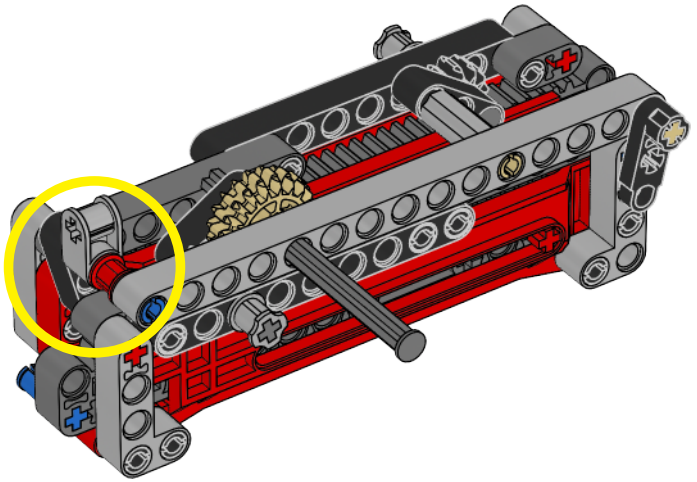

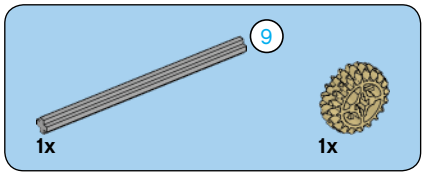

14

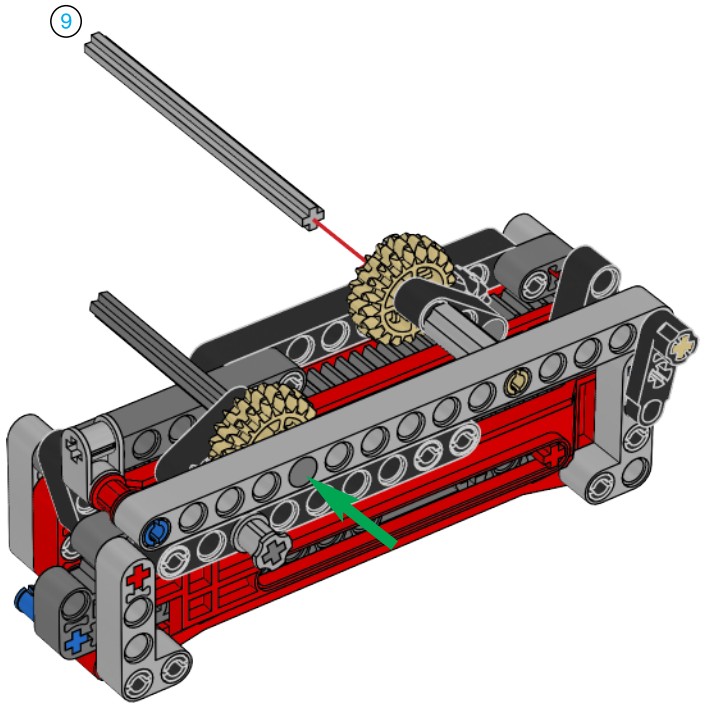

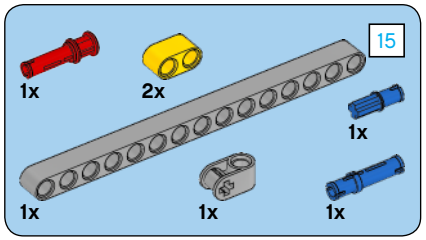

15

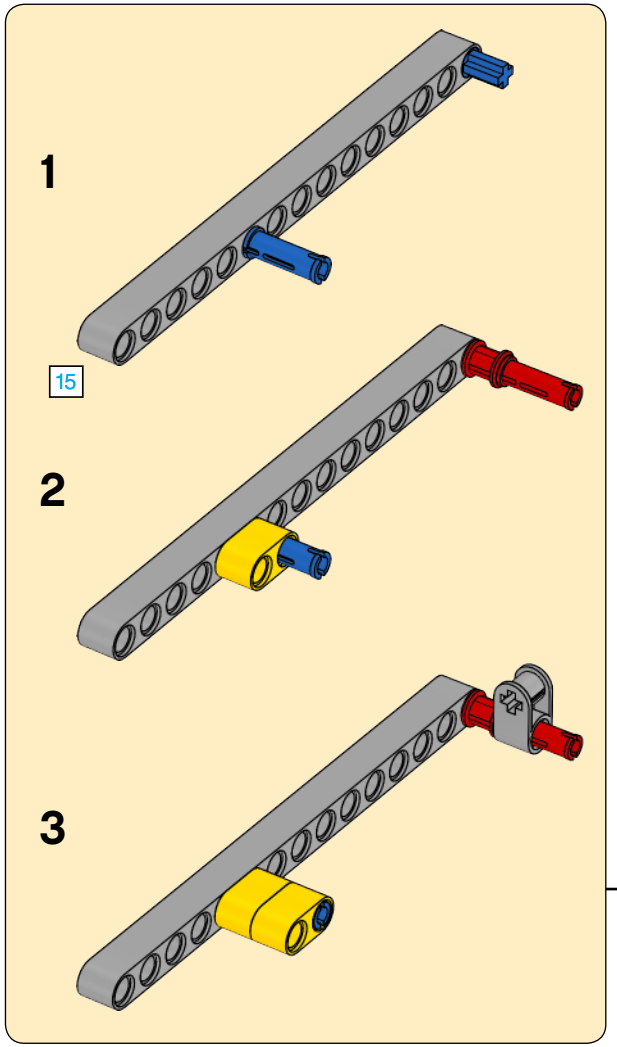

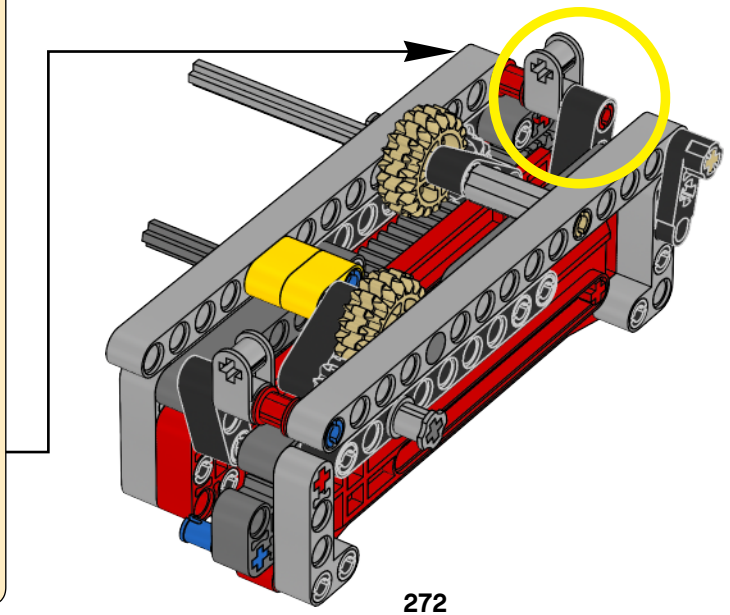

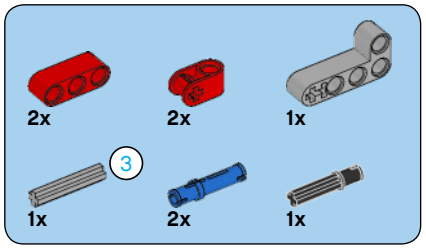

16

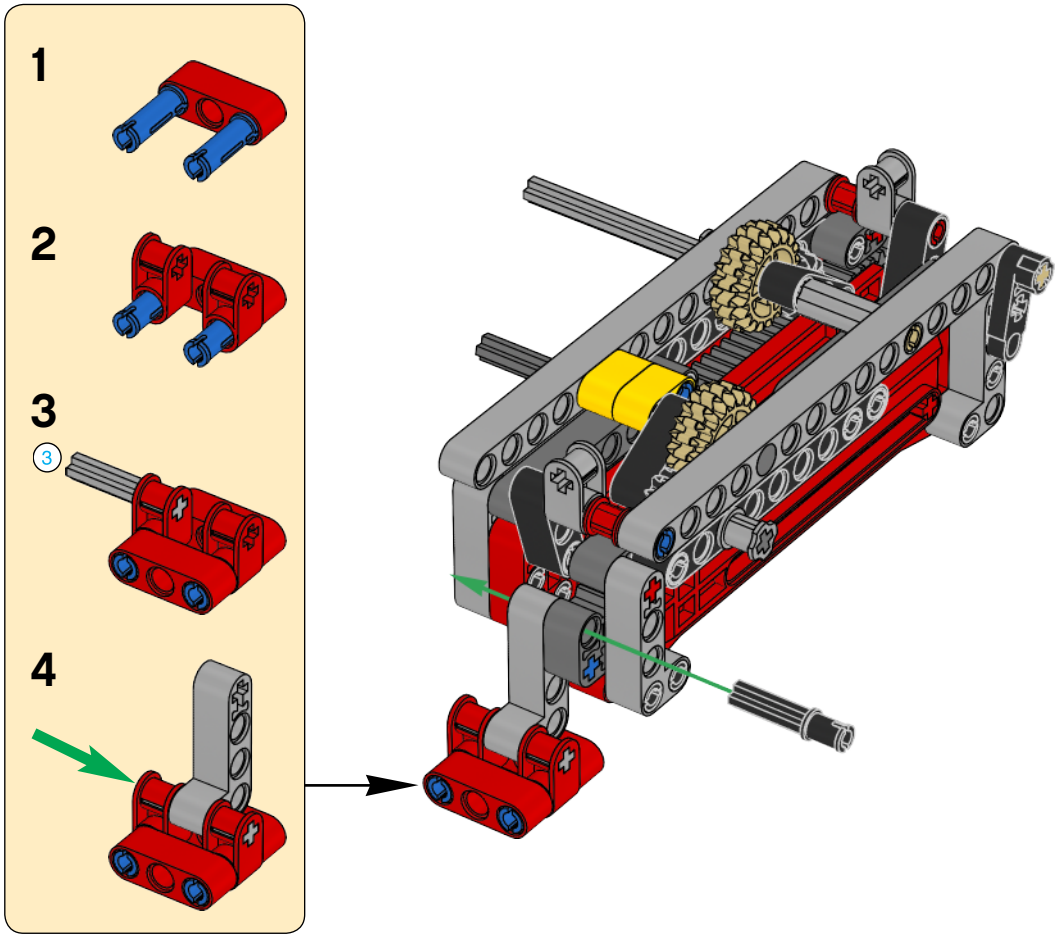

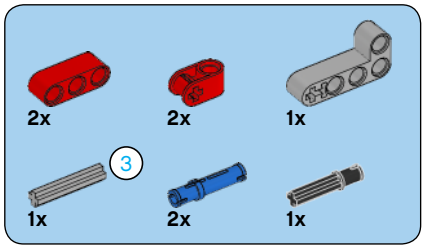

17

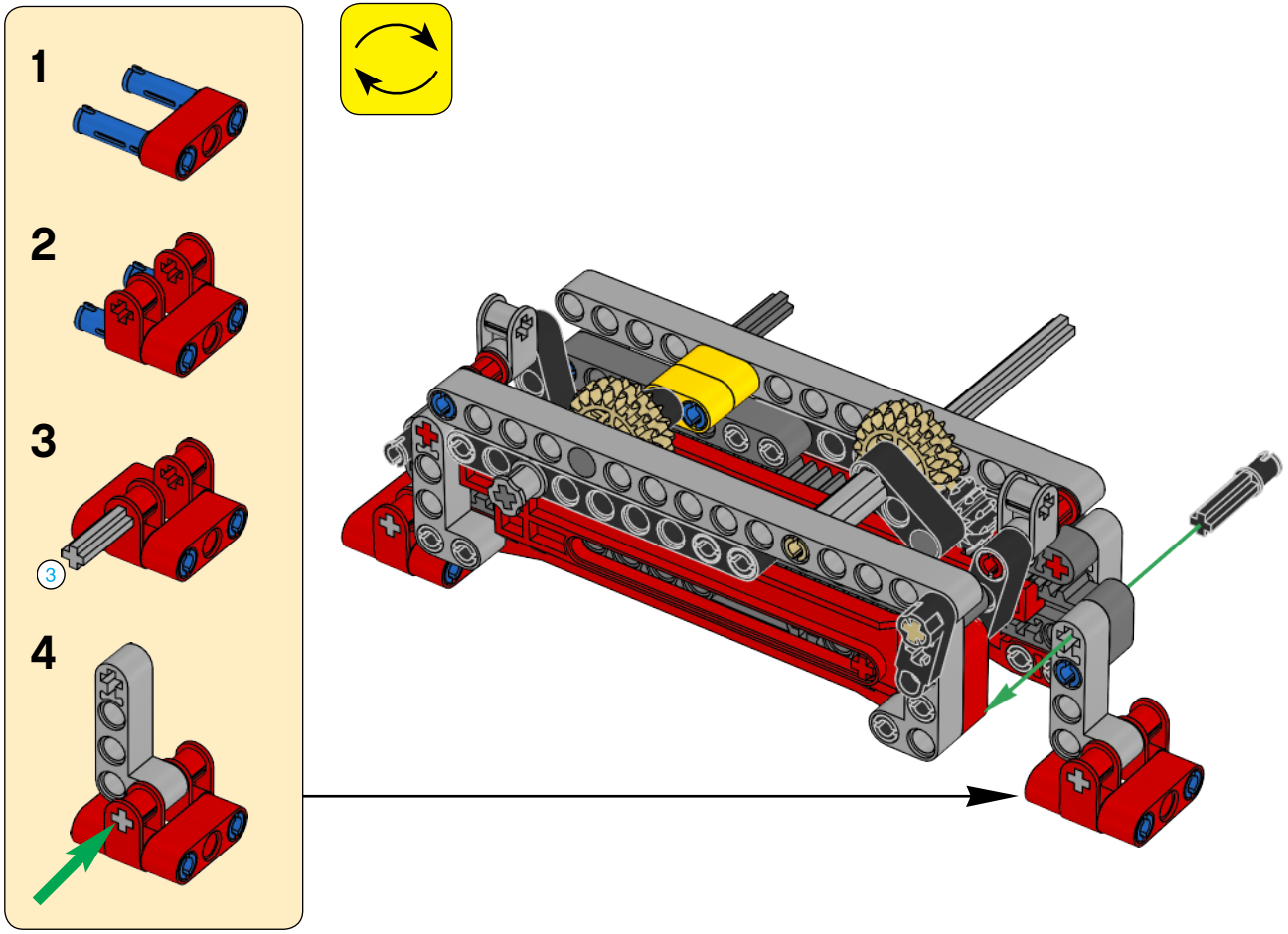

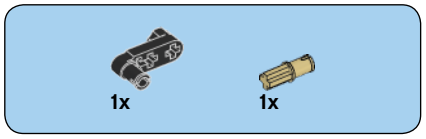

18

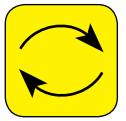

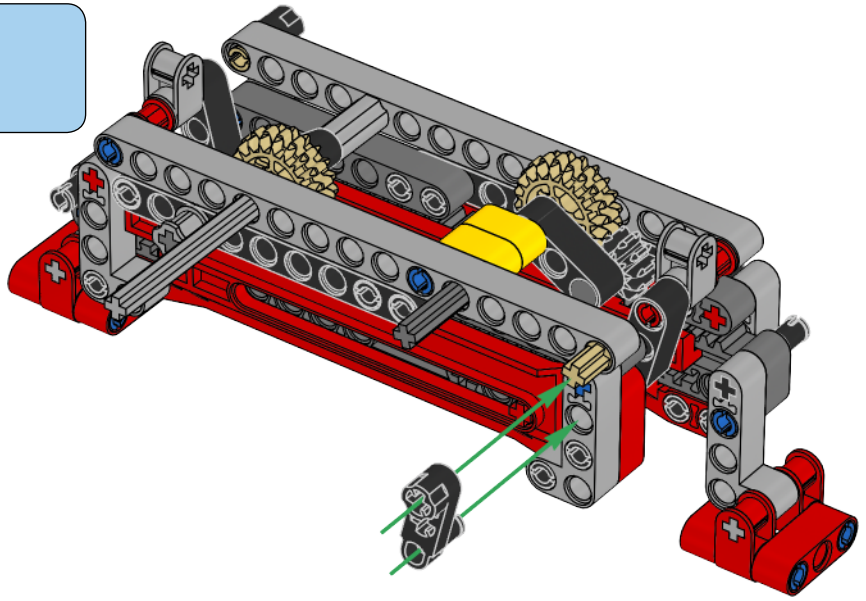

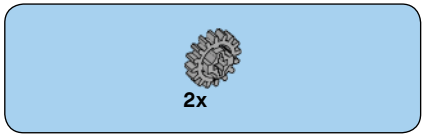

19

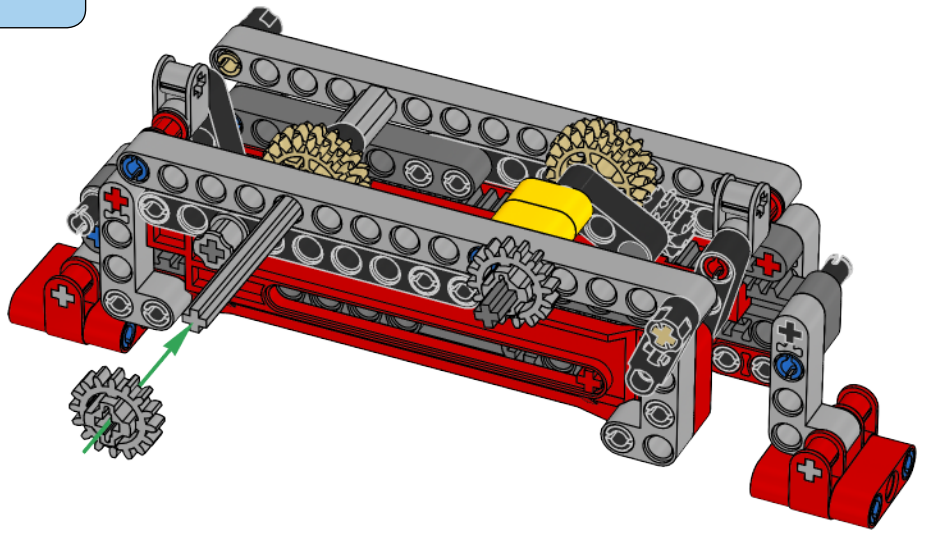

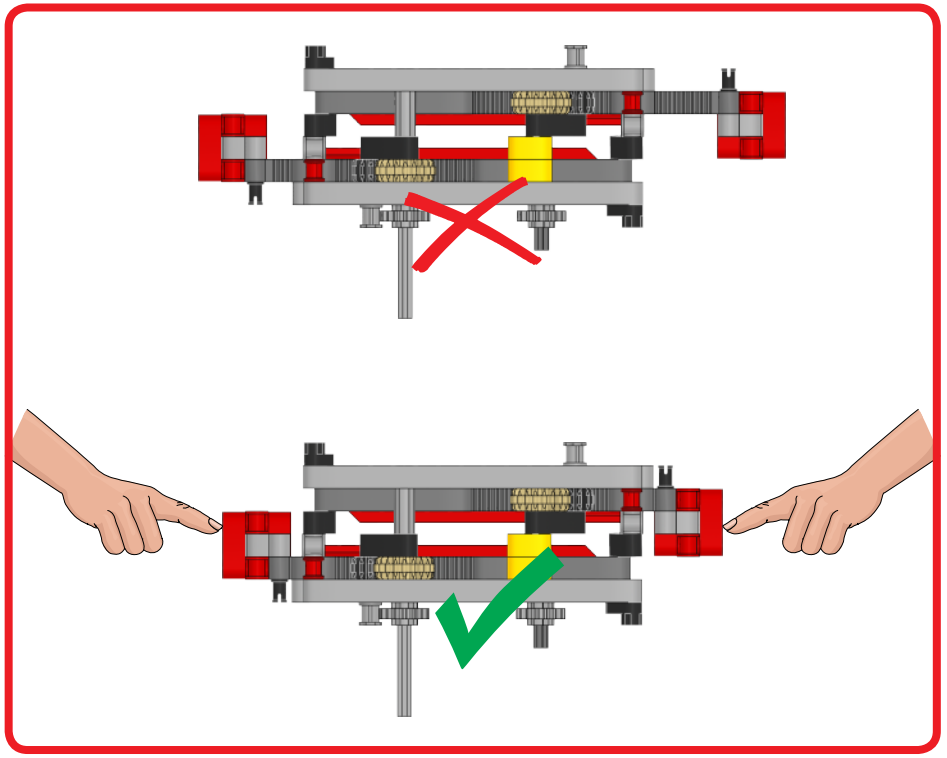

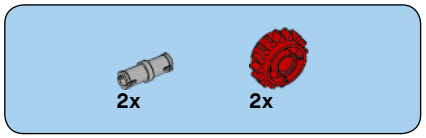

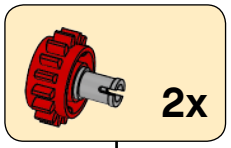

20

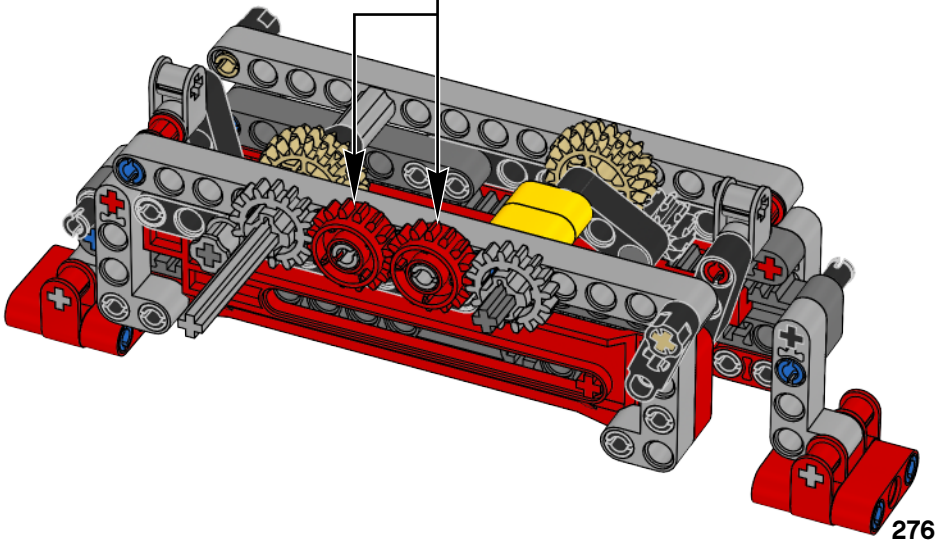

37

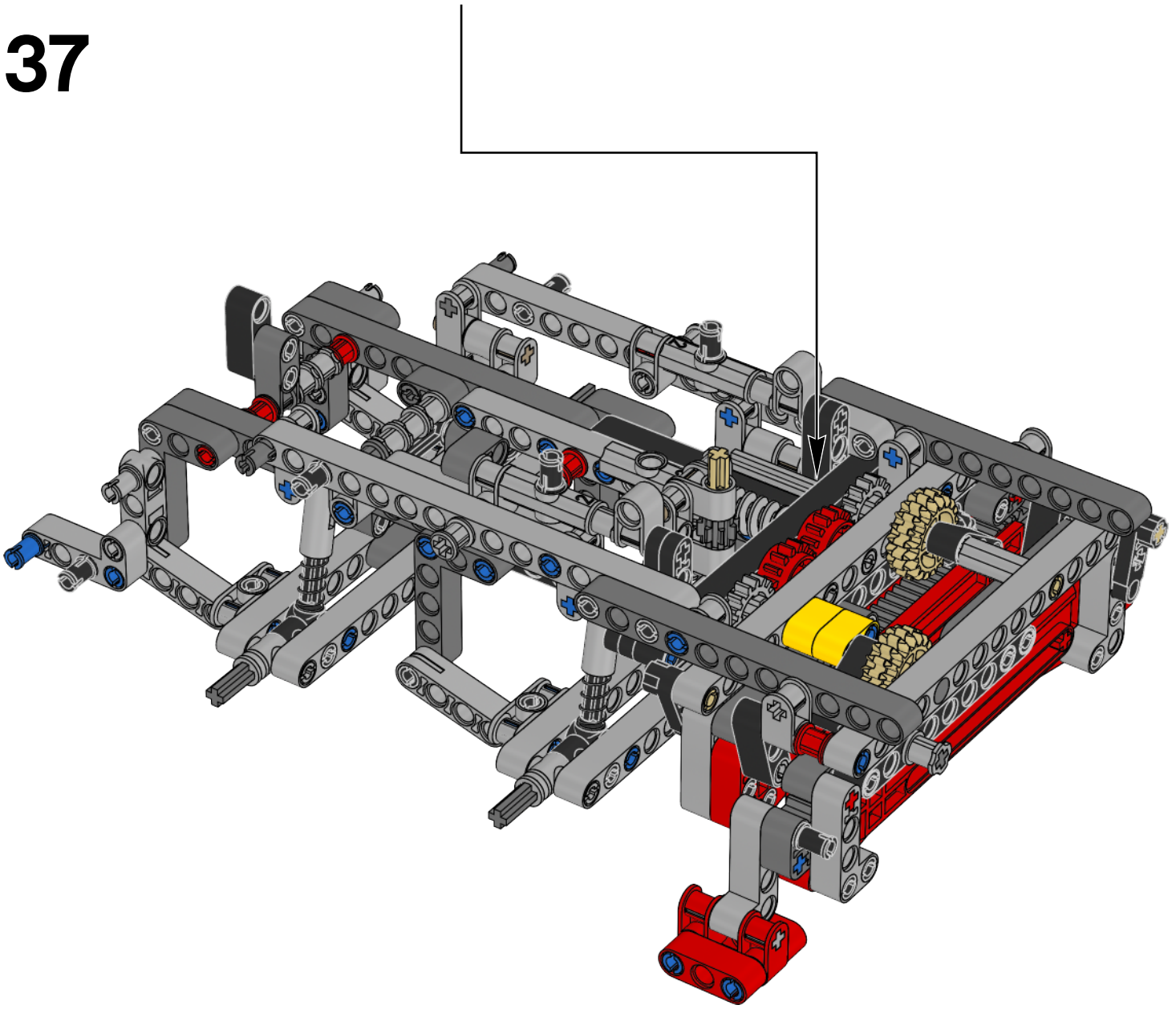

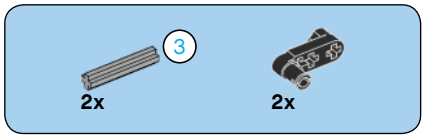

38

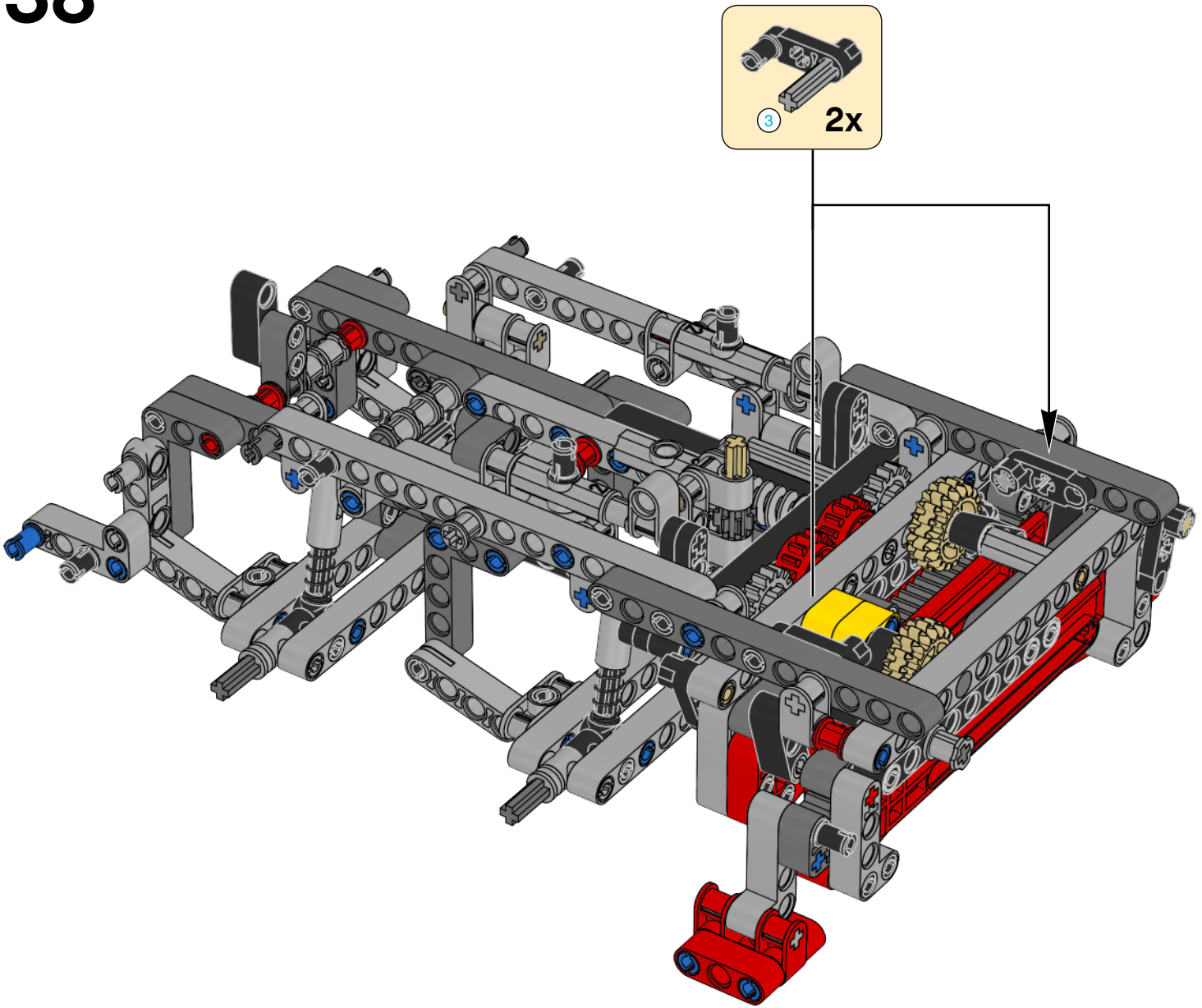

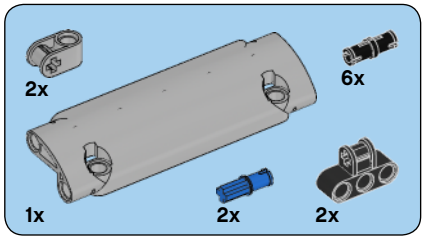

39

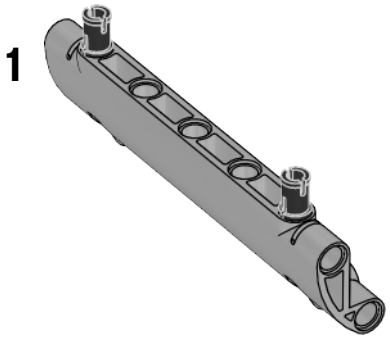

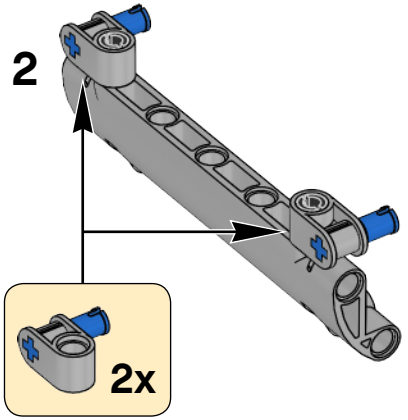

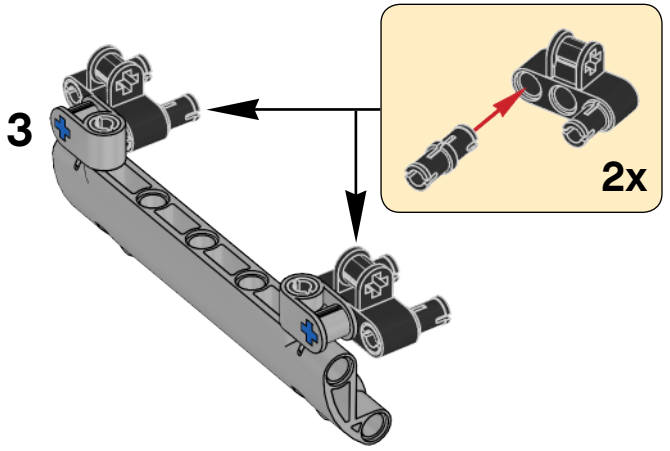

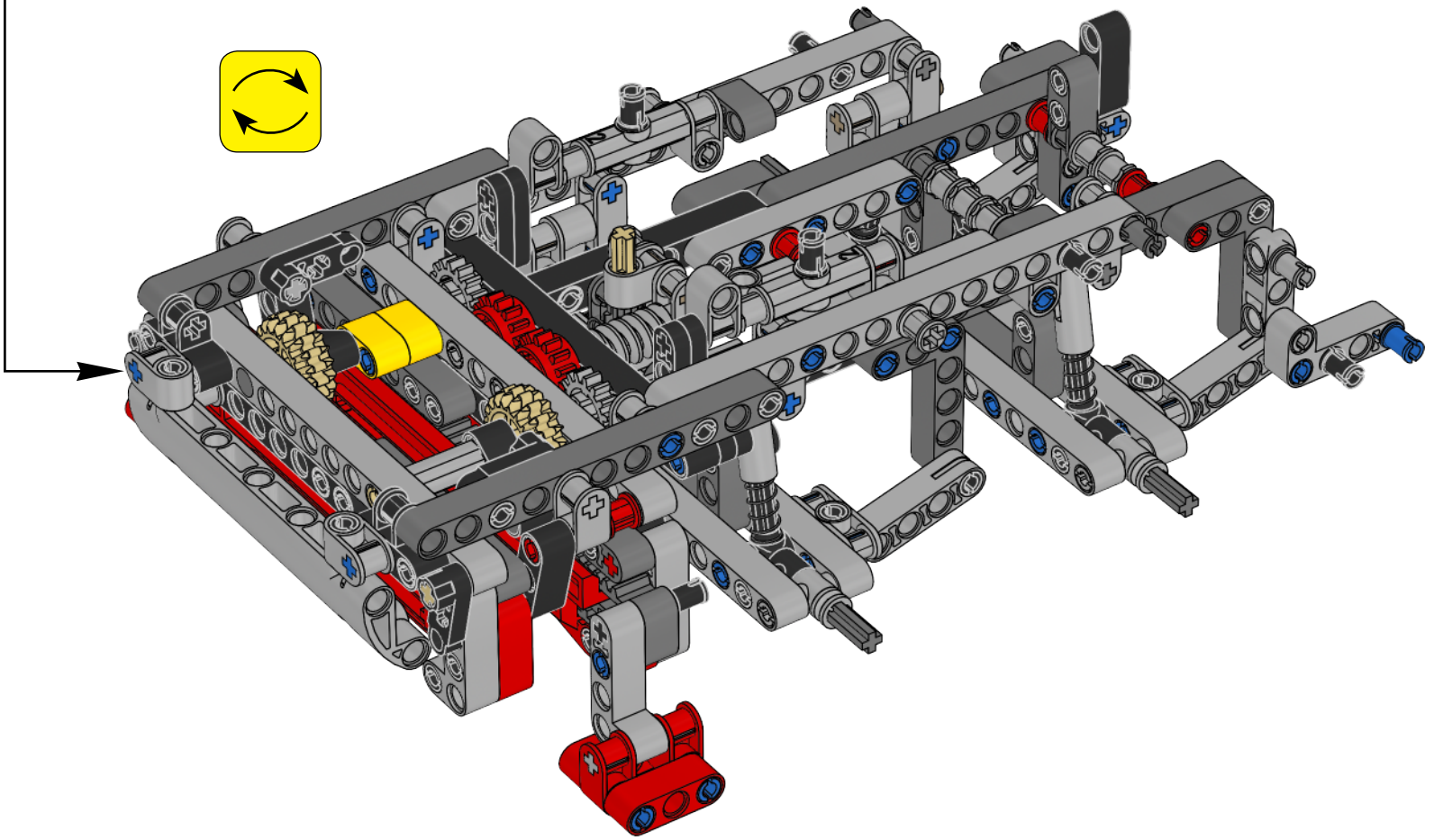

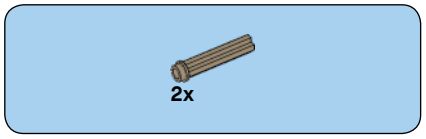

40

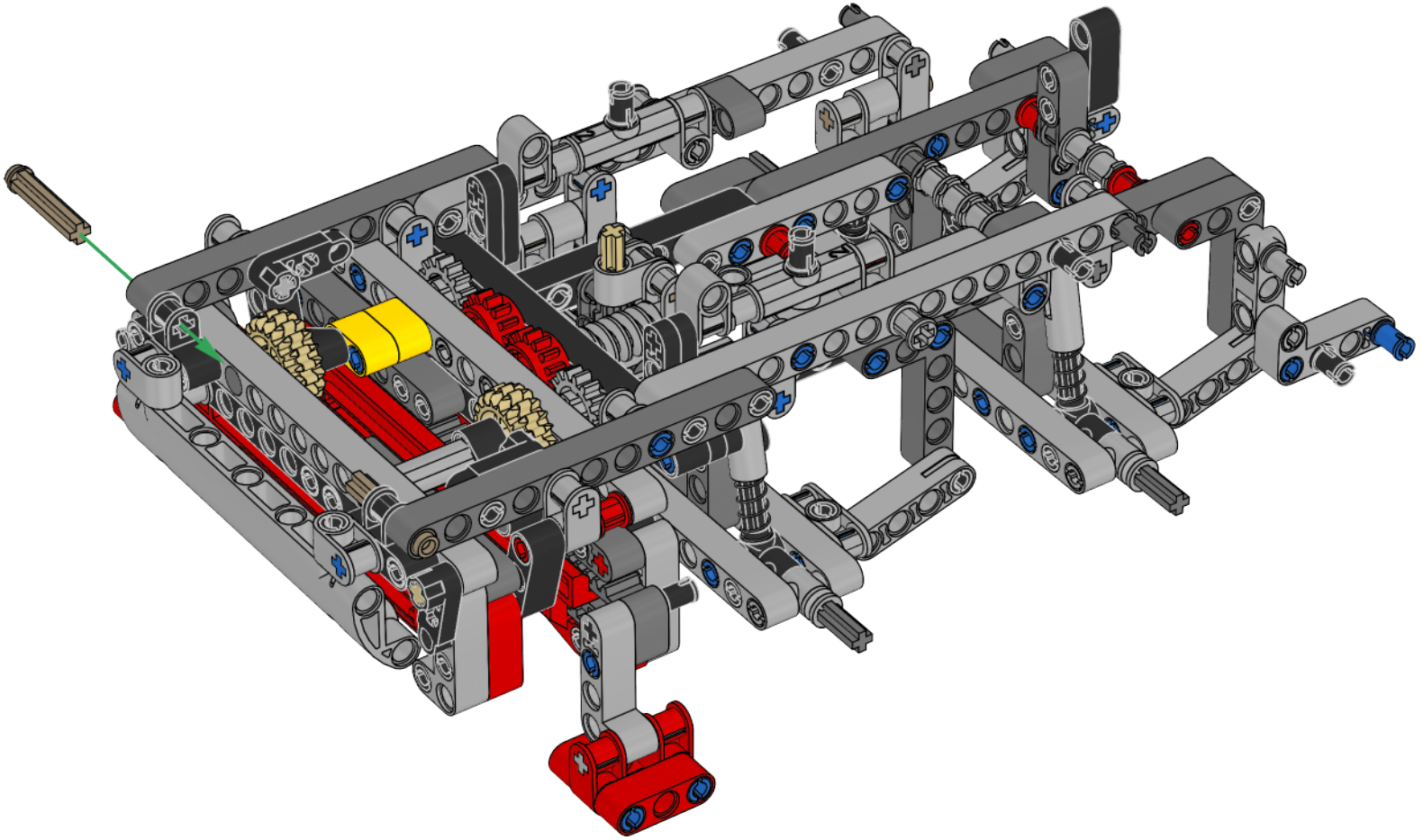

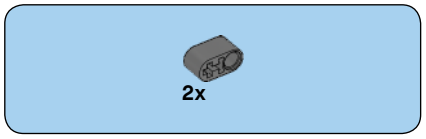

41

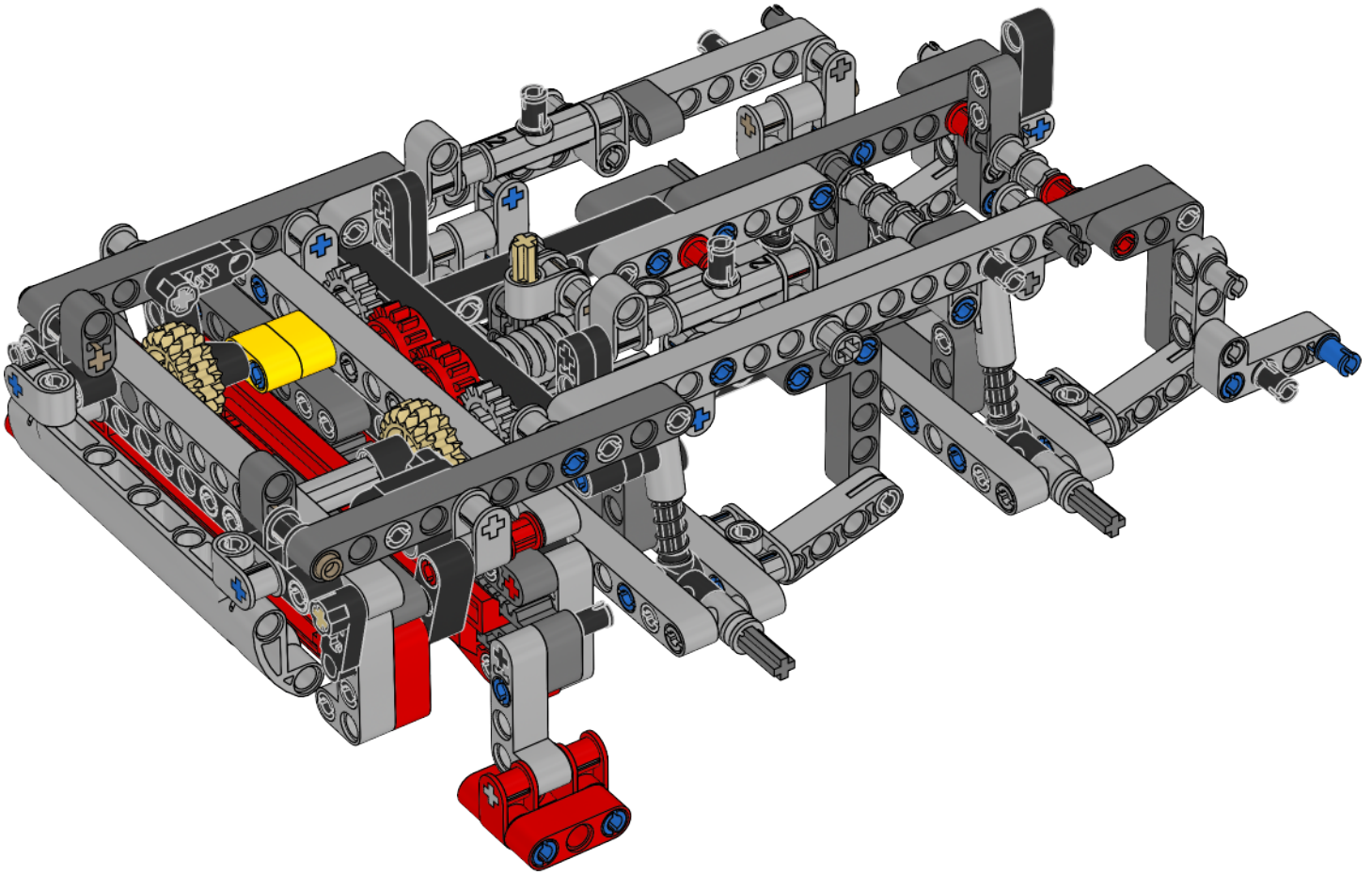

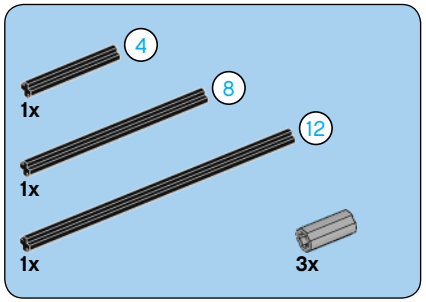

42

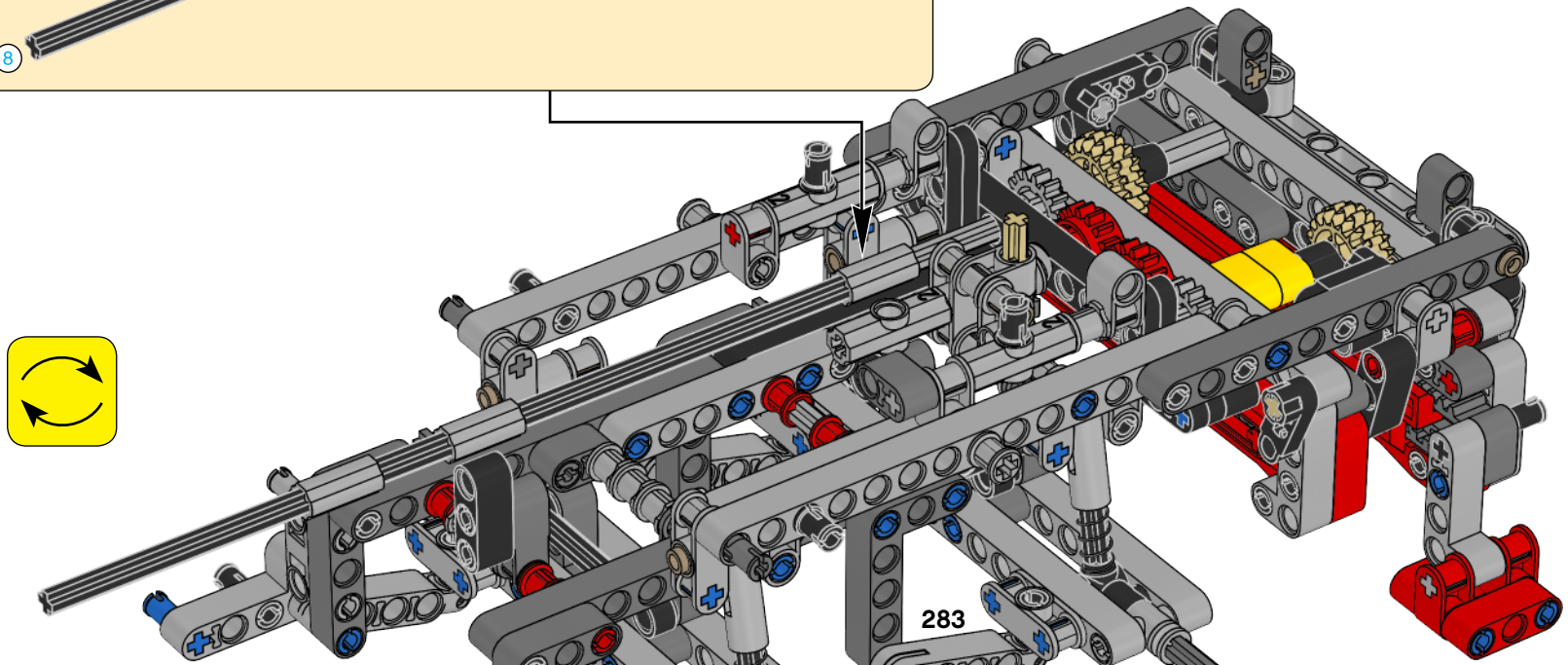

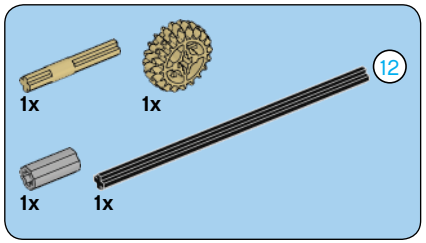

43

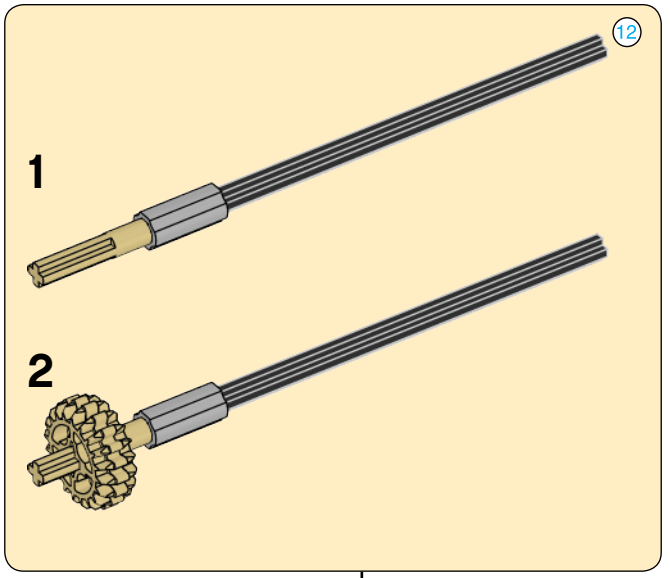

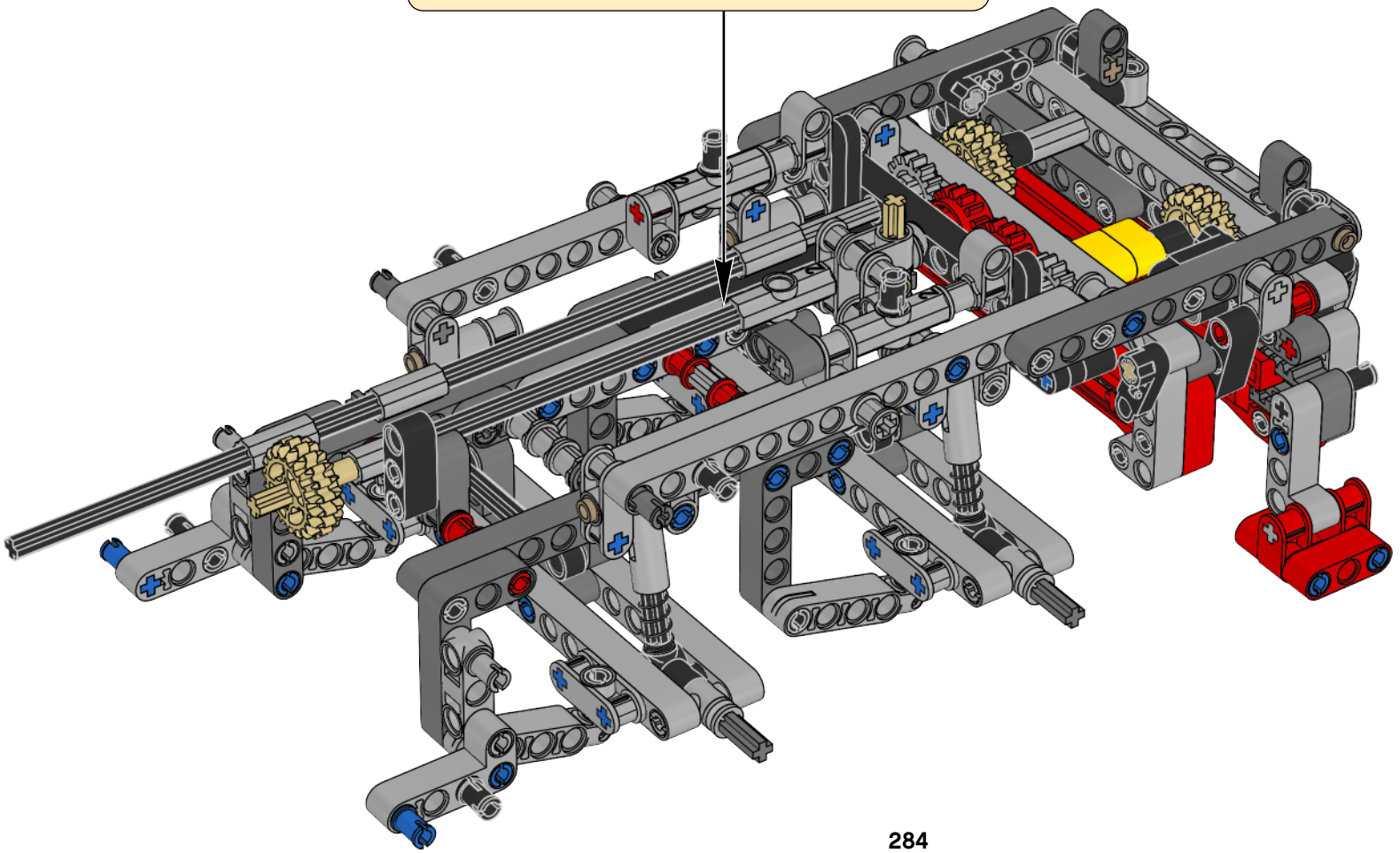

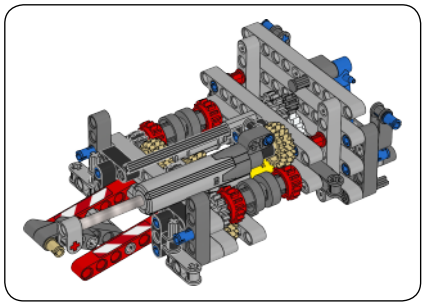

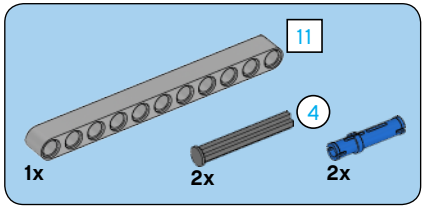

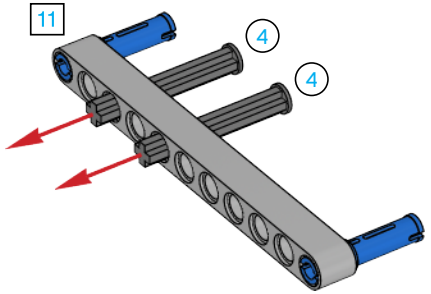

1

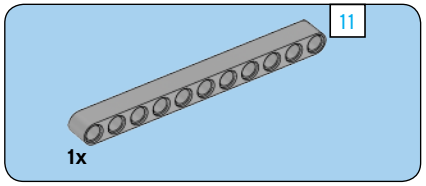

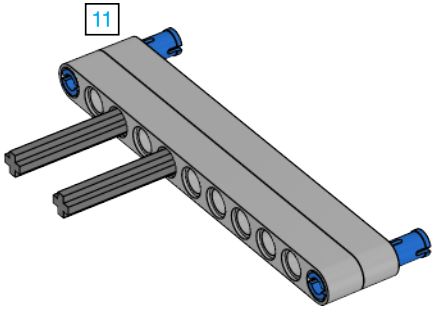

2

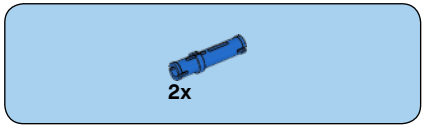

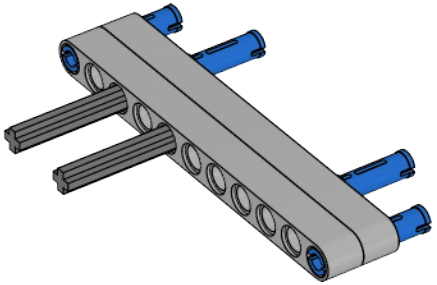

3

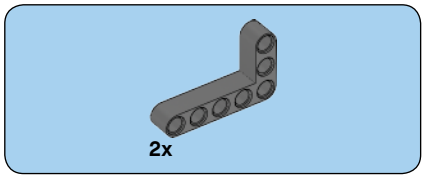

4

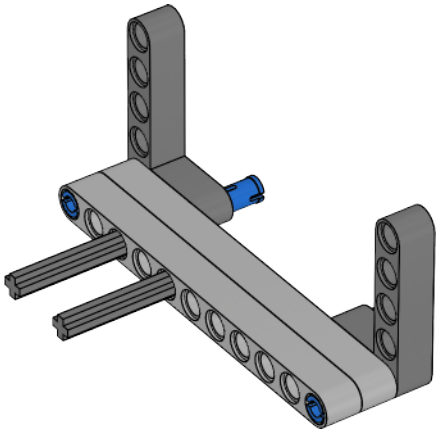

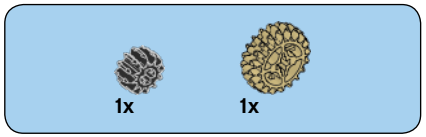

5

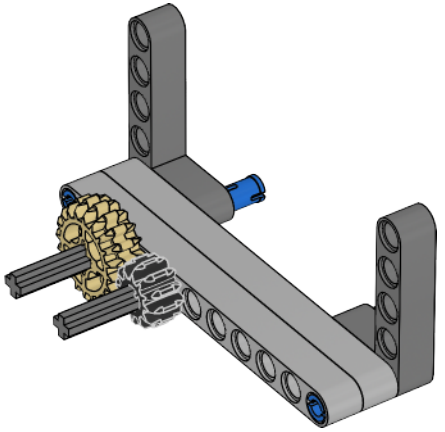

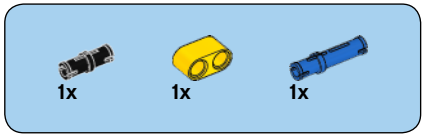

6

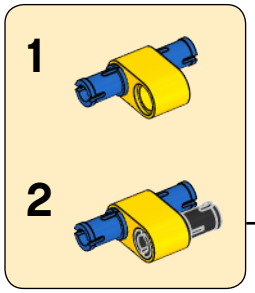

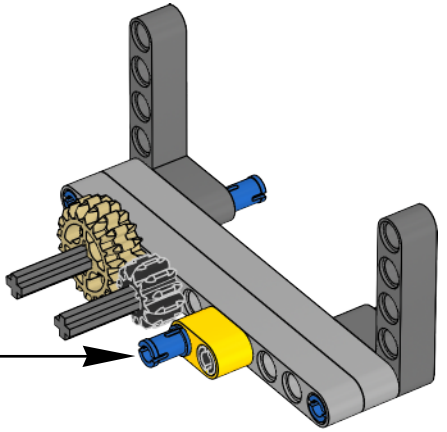

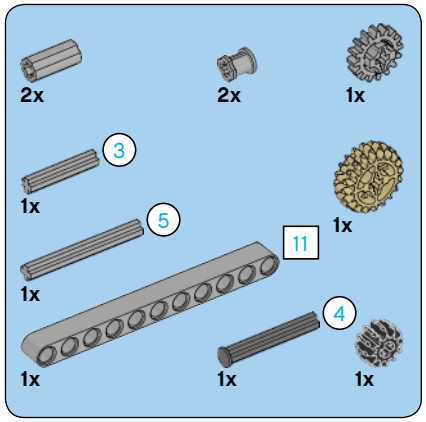

7

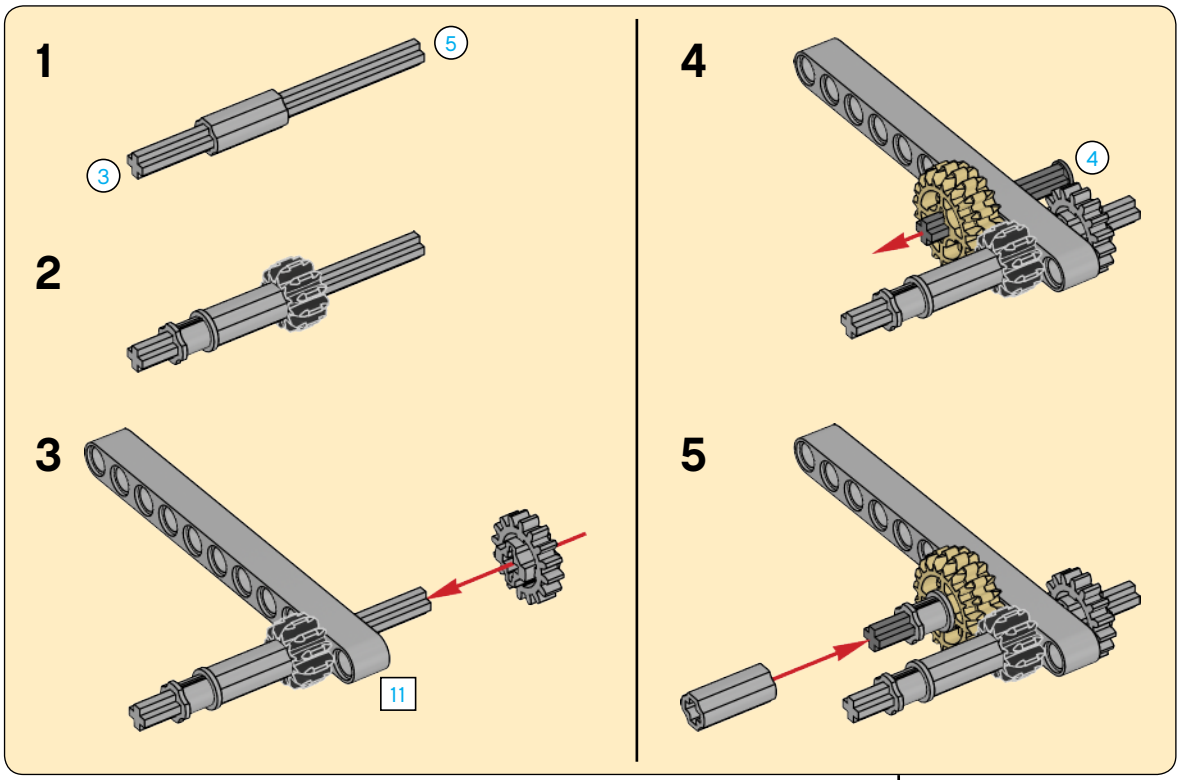

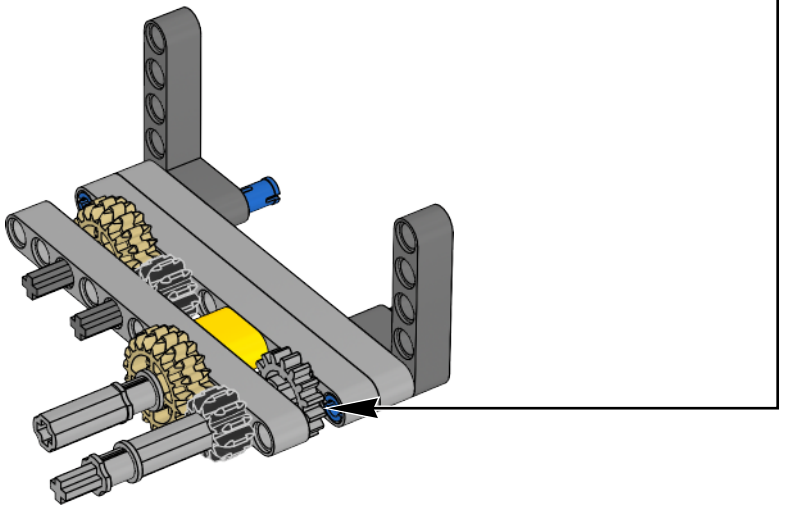

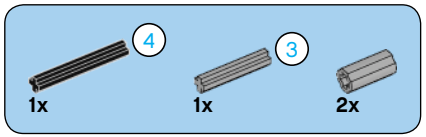

8

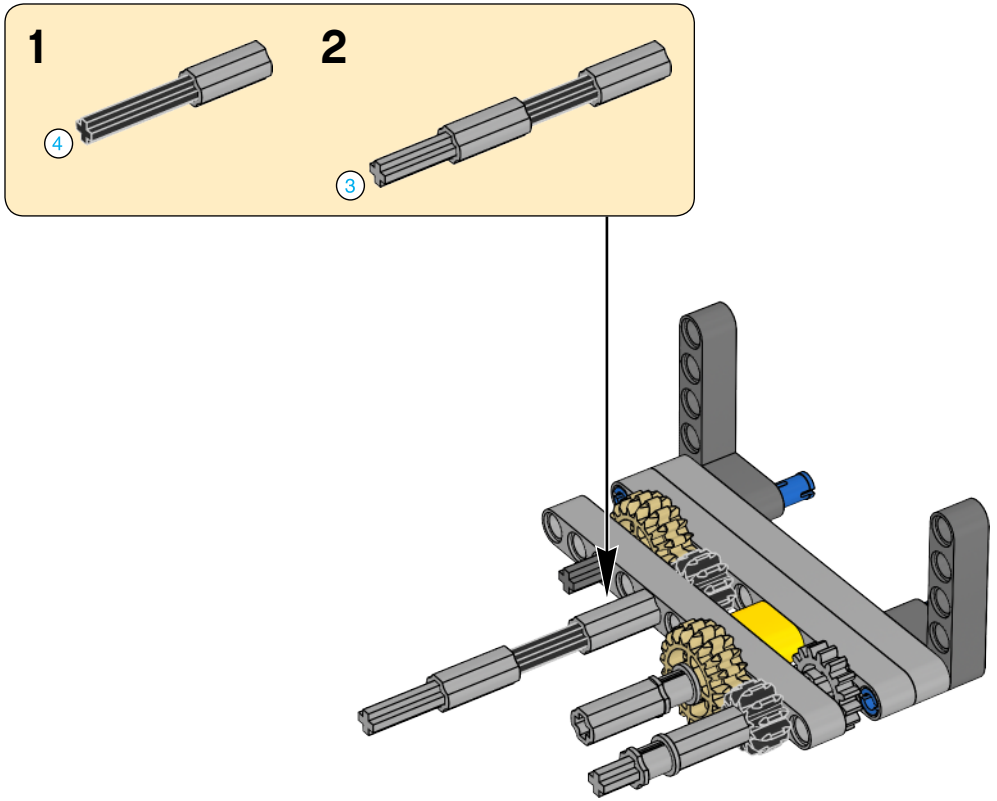

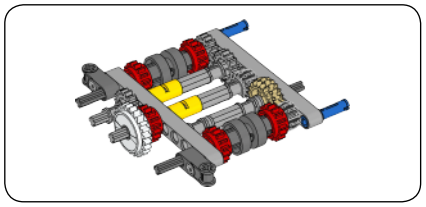

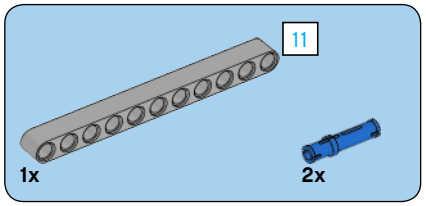

1

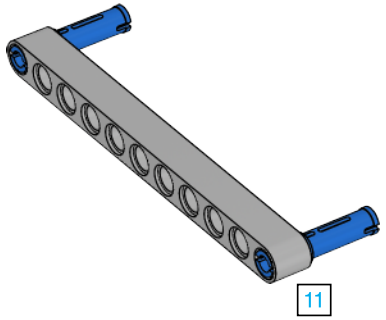

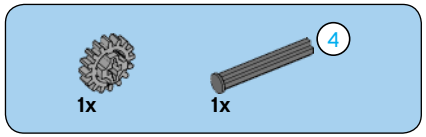

2

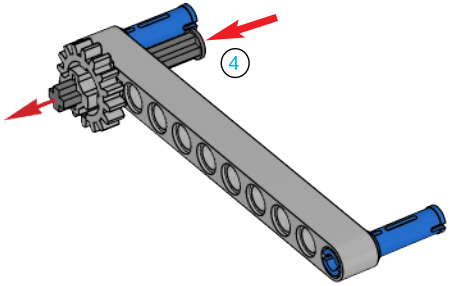

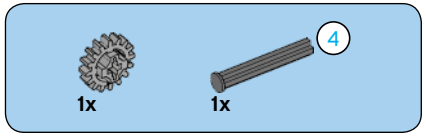

3

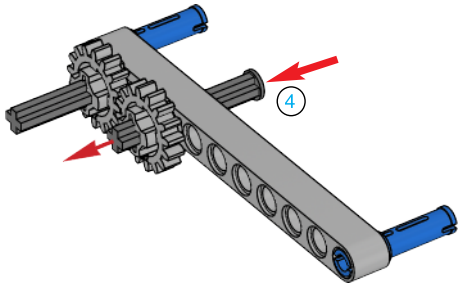

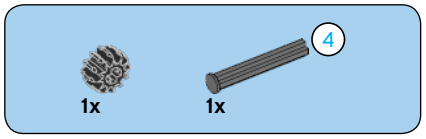

4

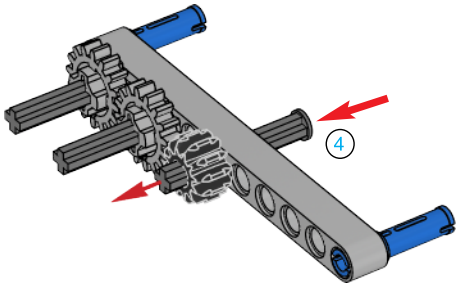

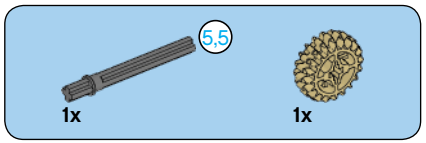

5

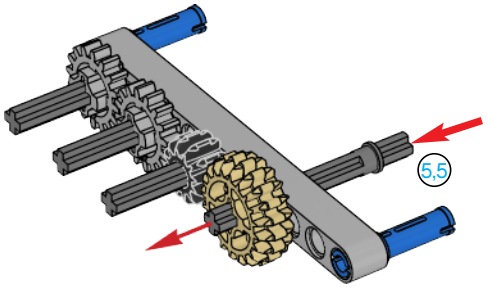

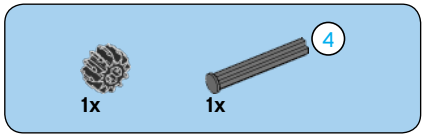

6

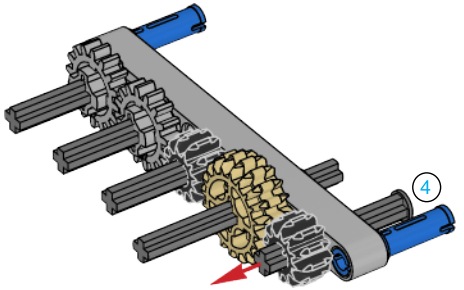

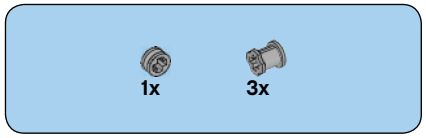

7

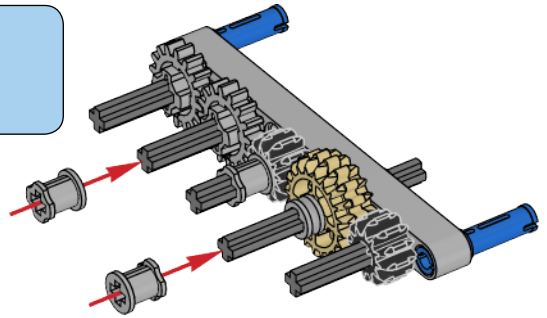

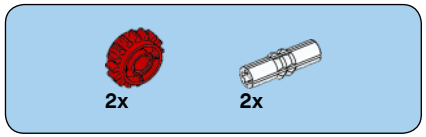

8

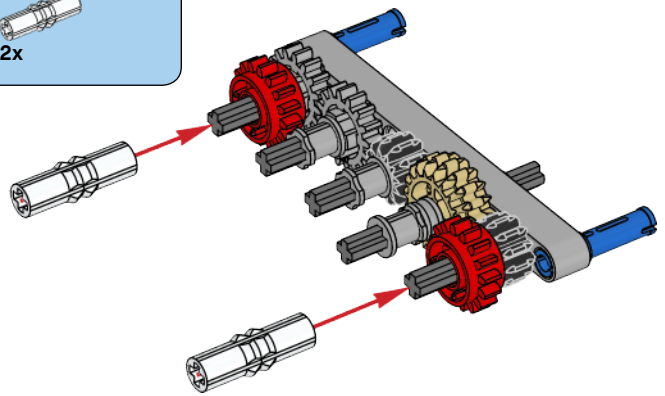

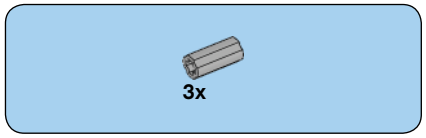

9

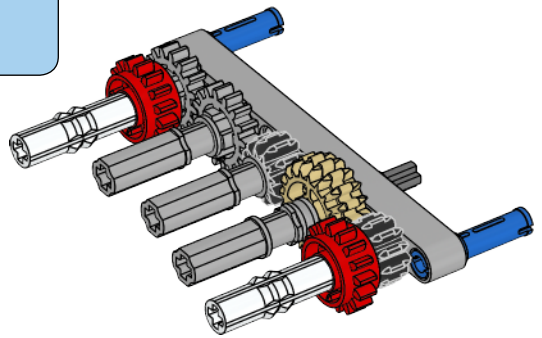

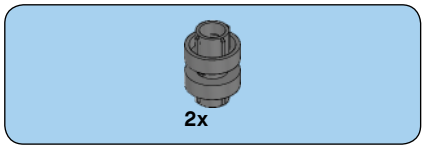

10

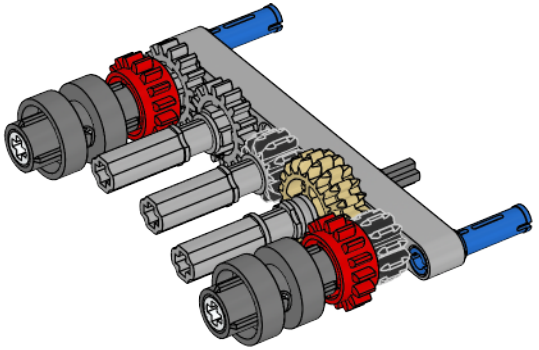

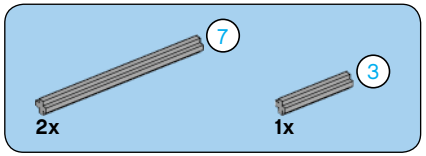

11

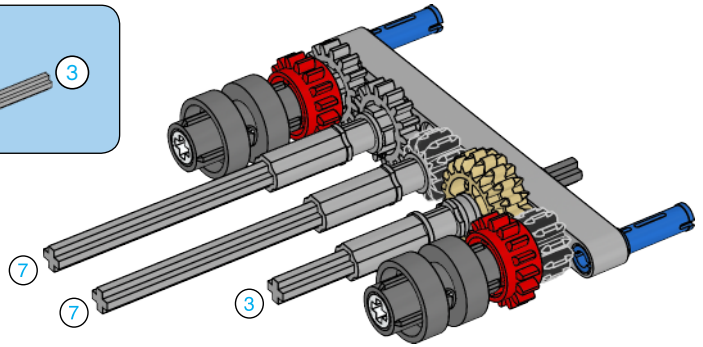

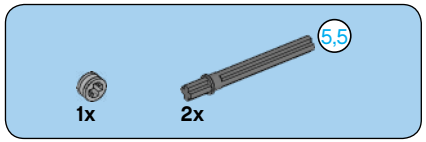

12

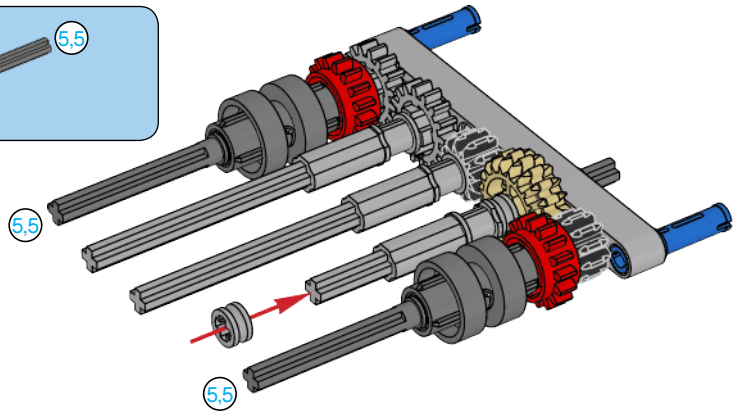

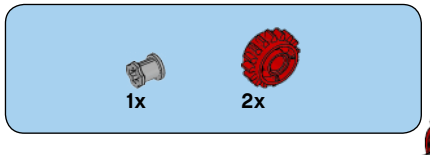

13

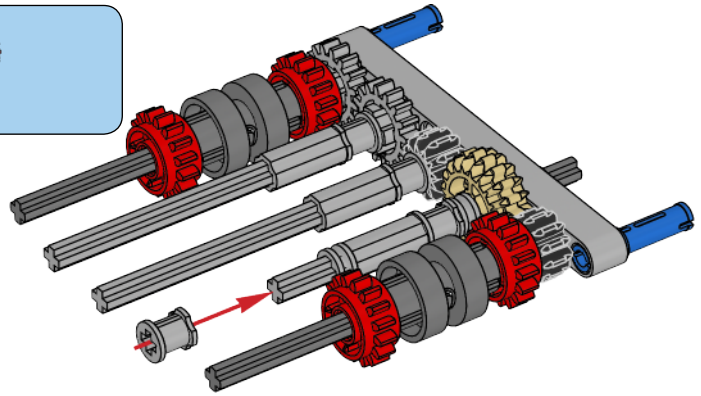

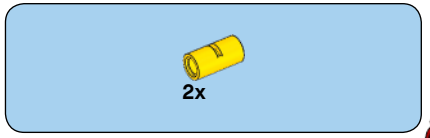

14

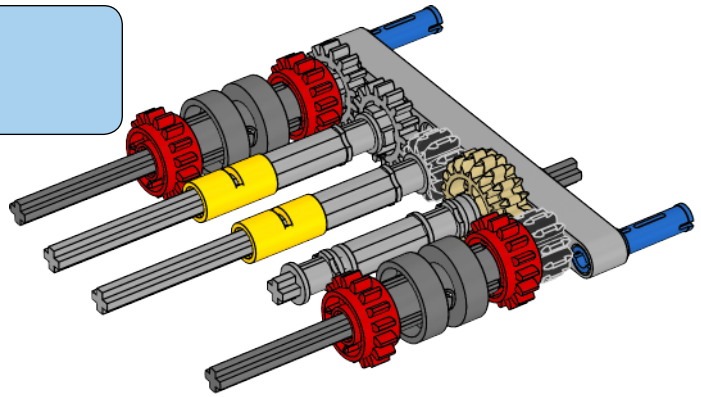

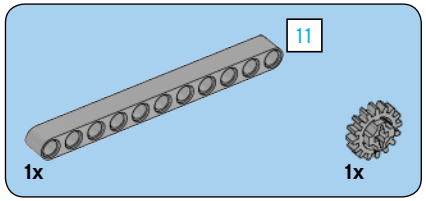

15

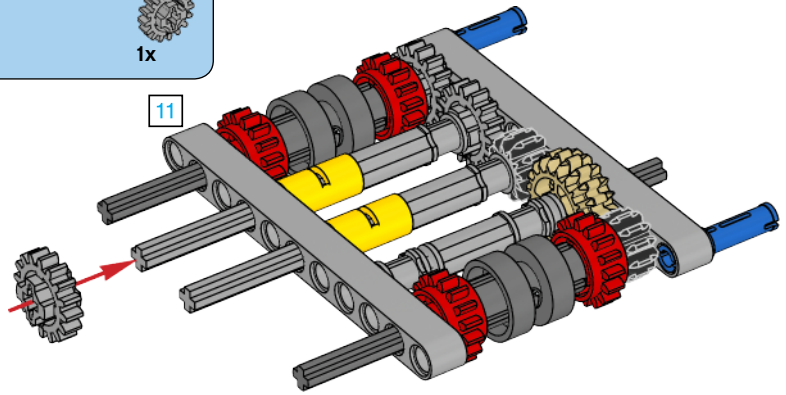



16

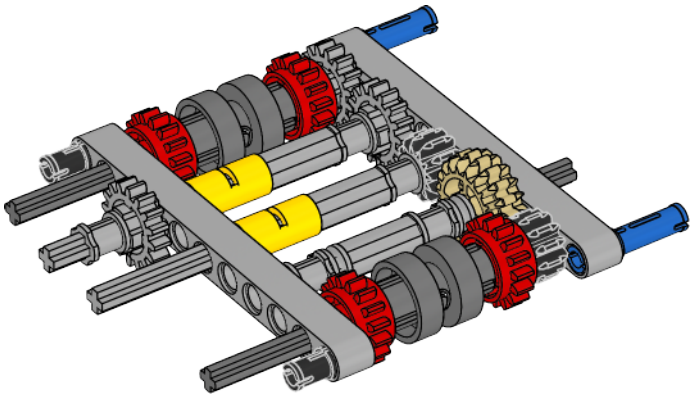



17

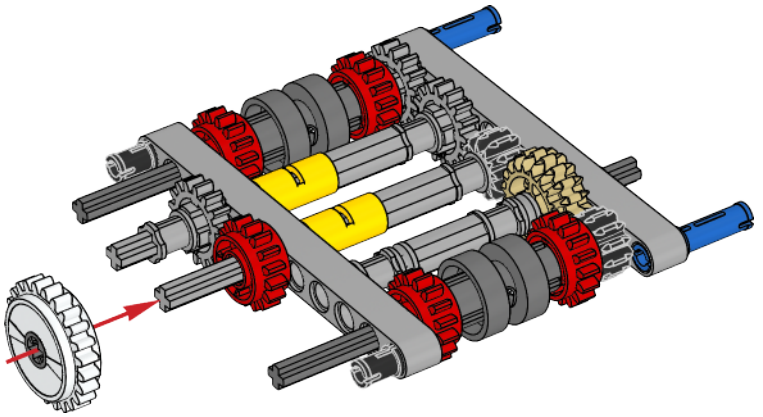

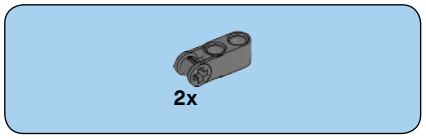

18

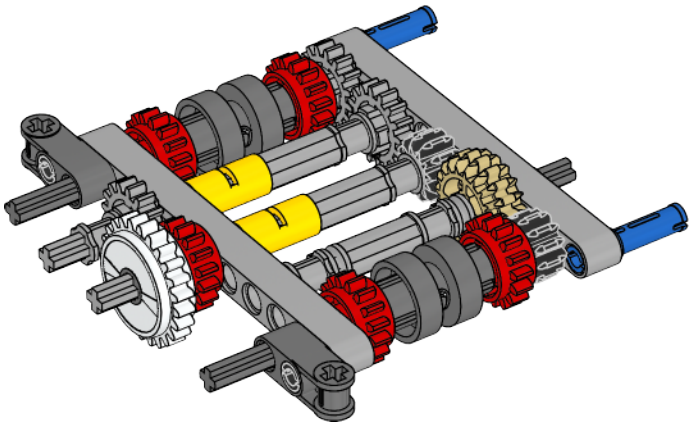

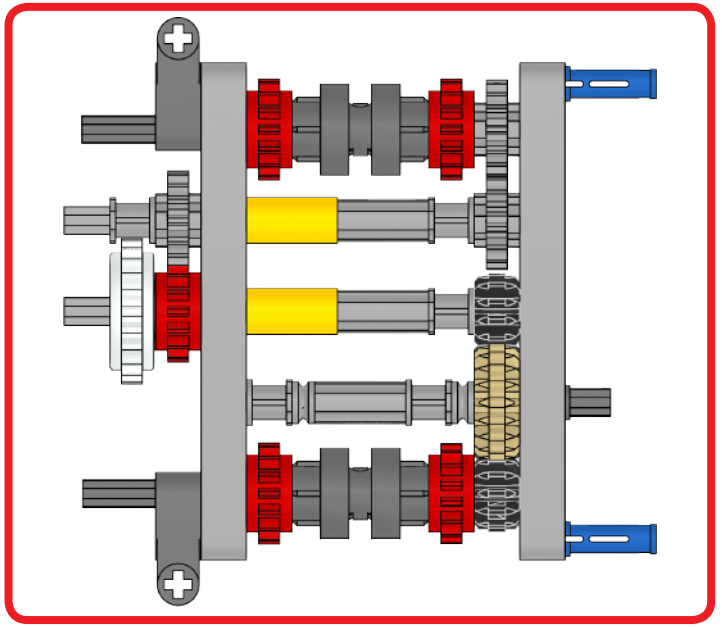

9

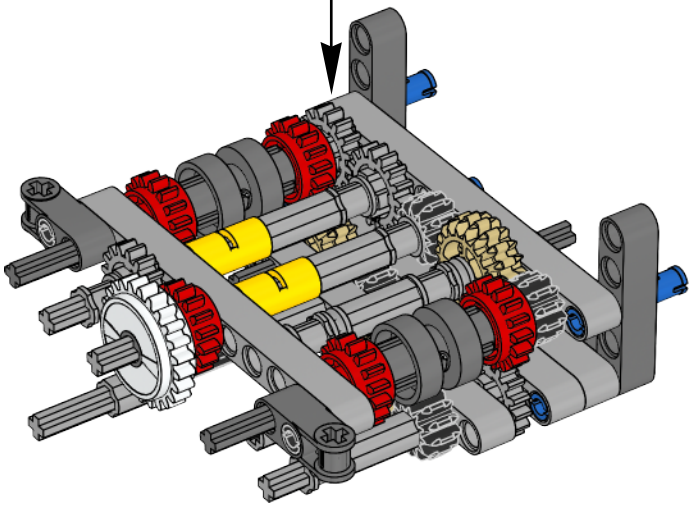

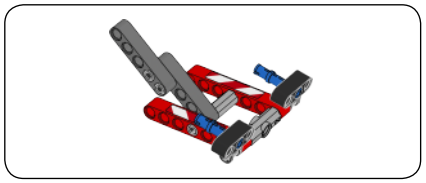

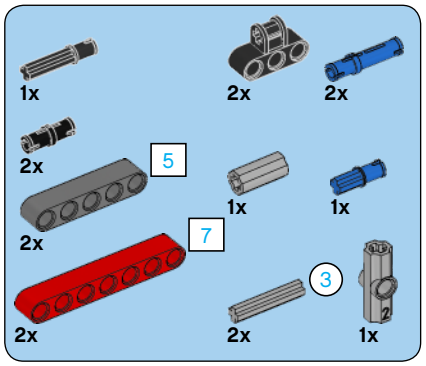

1

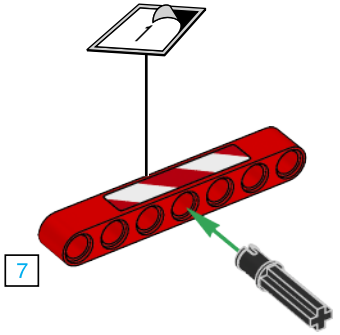

10

2

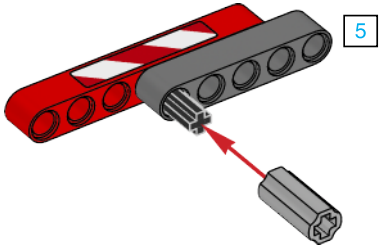

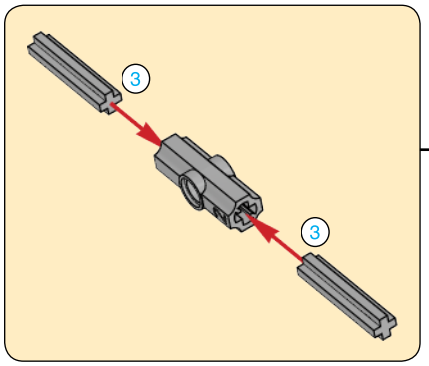

3

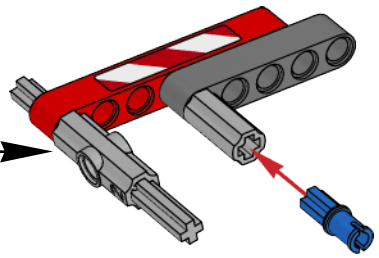

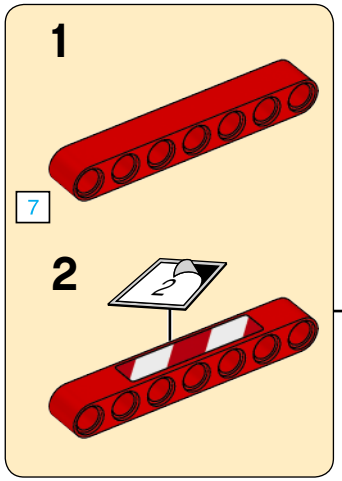

4

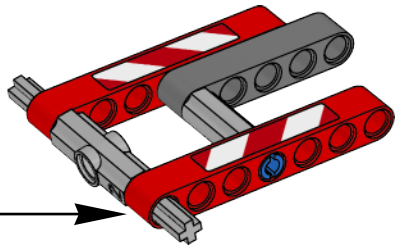

5

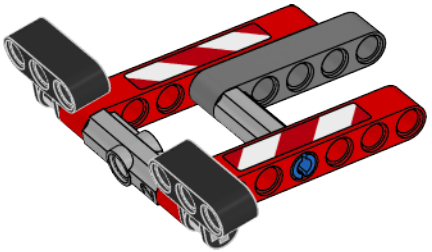

6

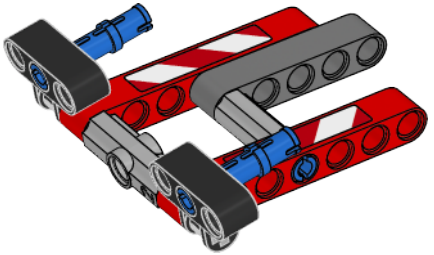

7

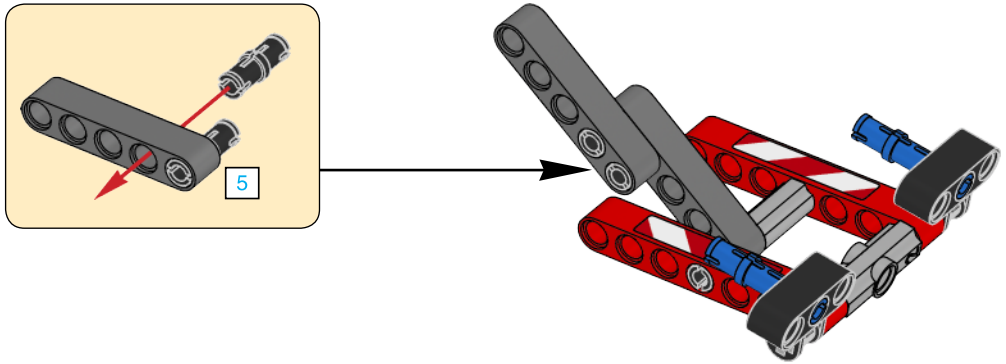

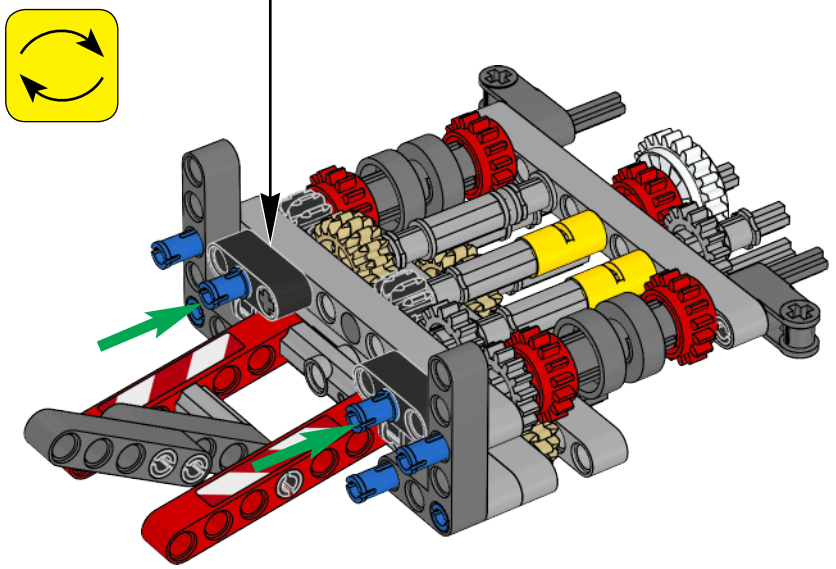

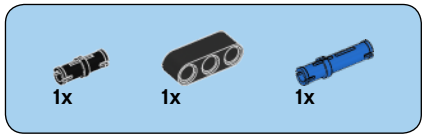

11

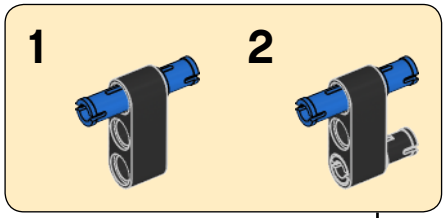

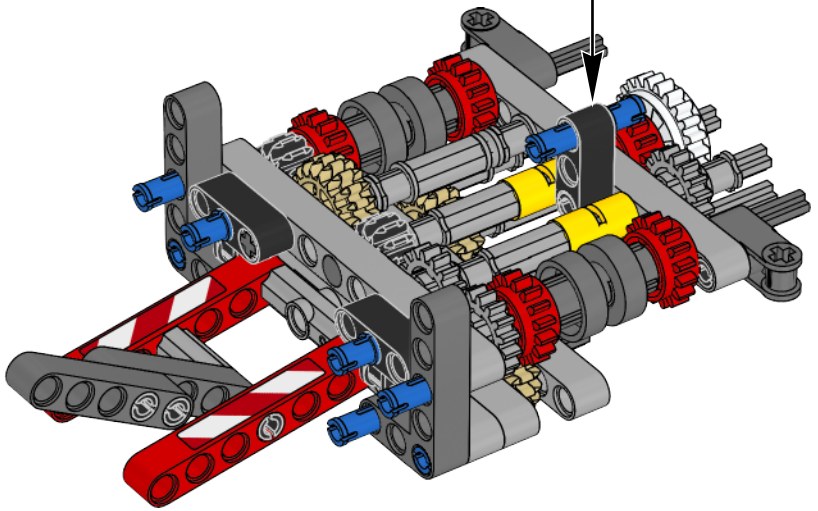

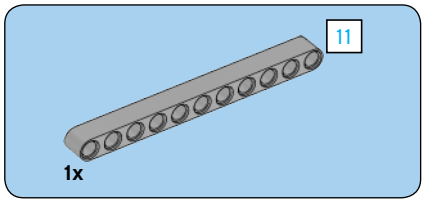

12

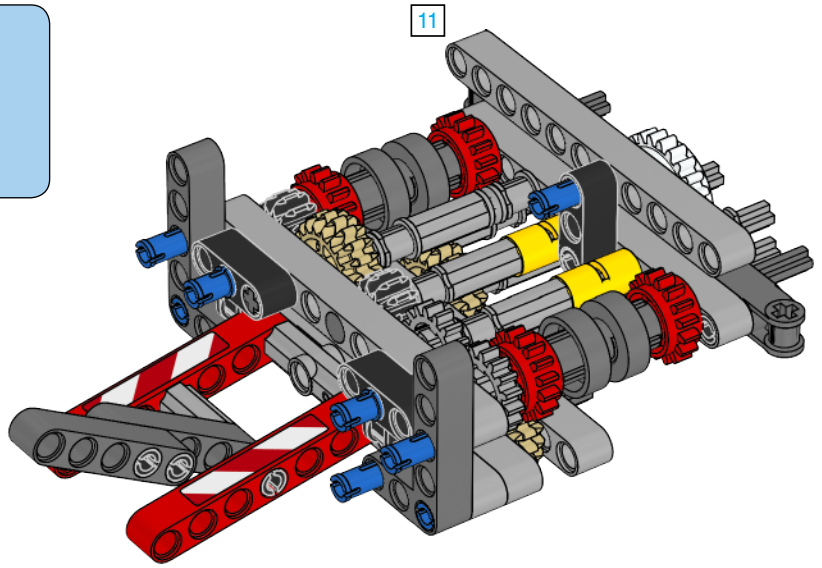

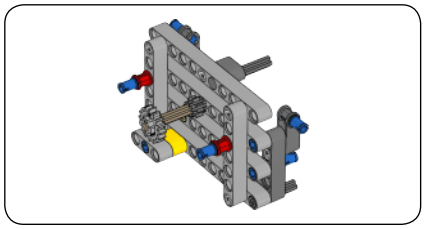

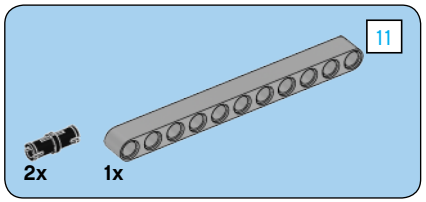

1

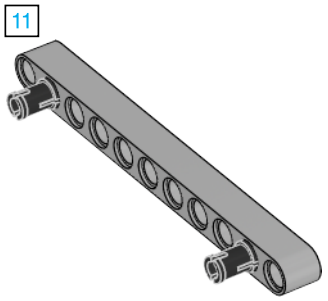

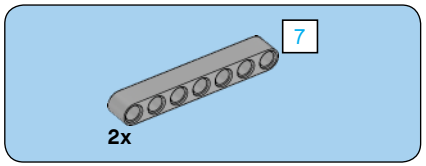

2

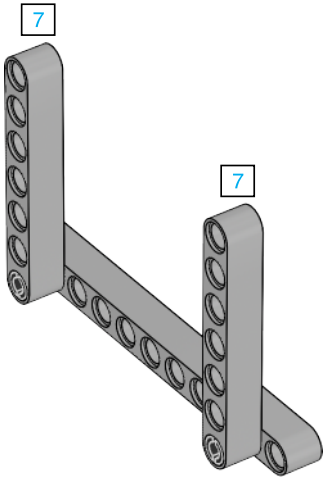

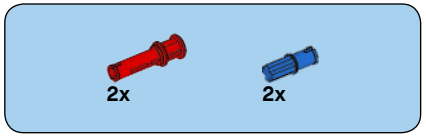

3

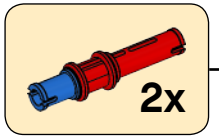

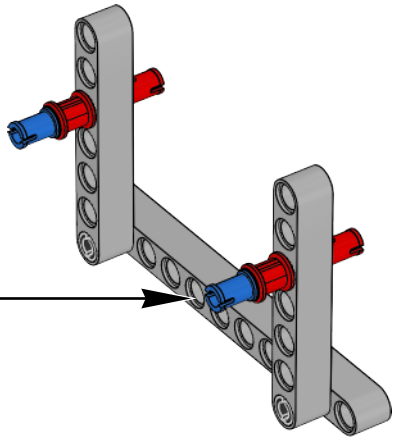

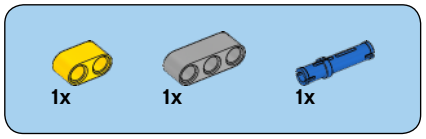

4

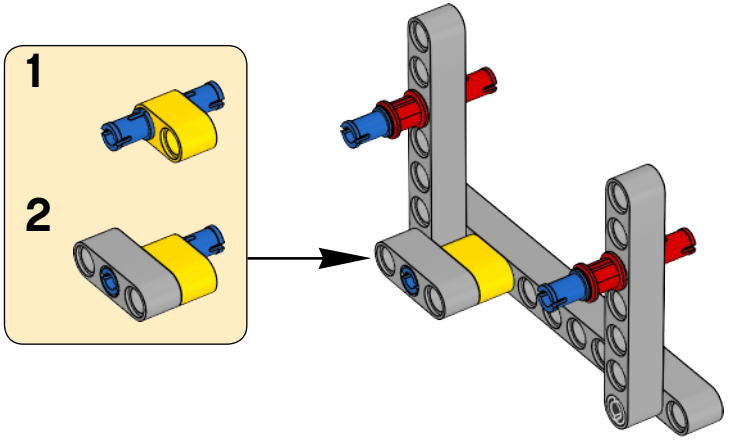

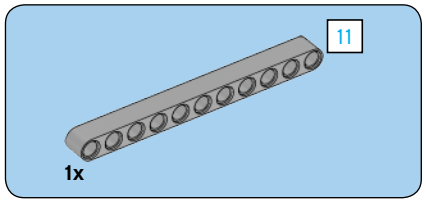

5

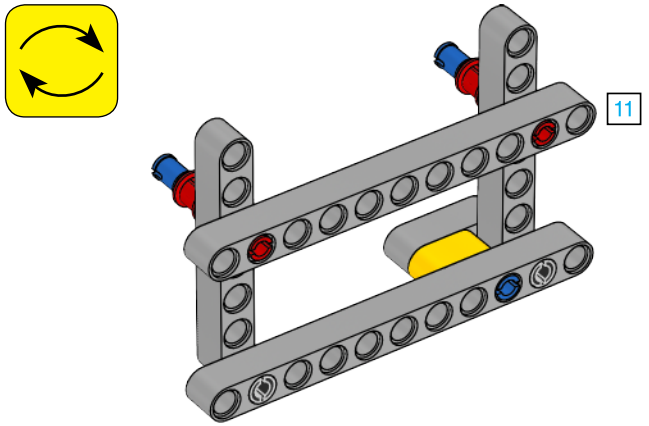

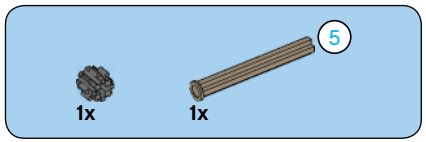

6

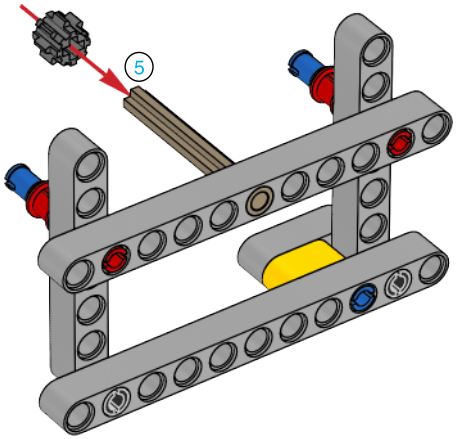

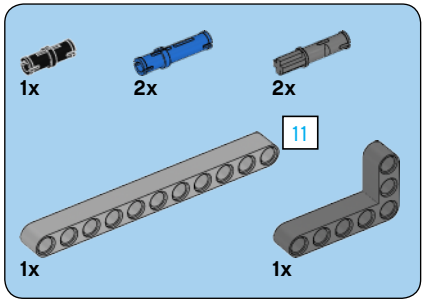

7

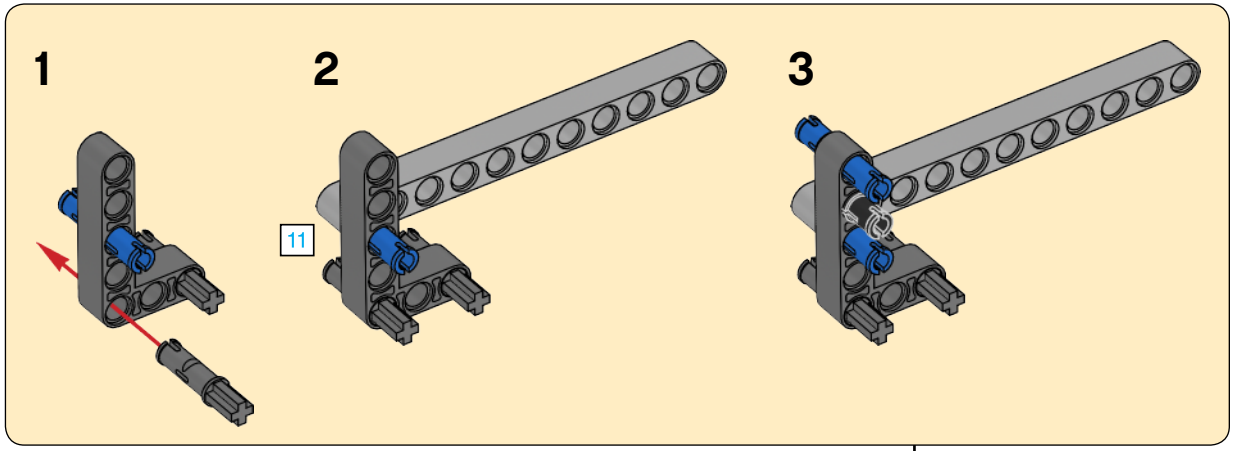

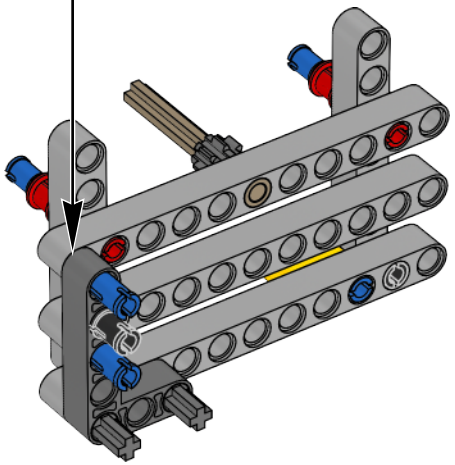

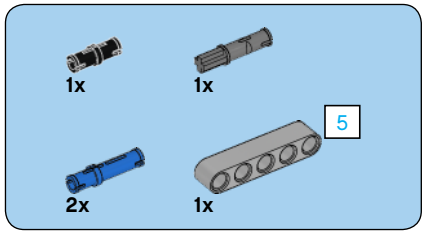

8

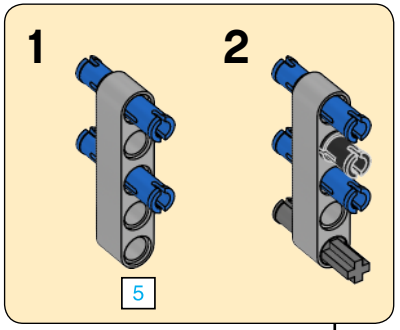

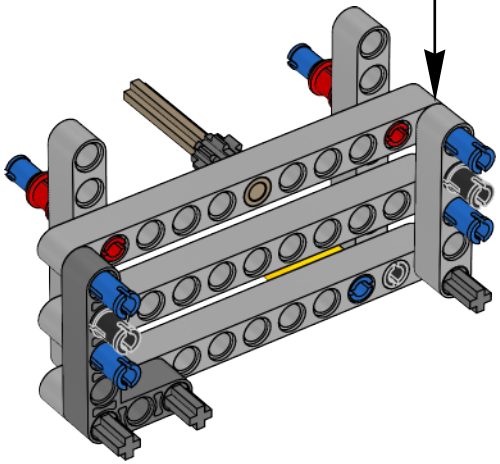

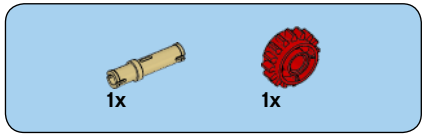

9

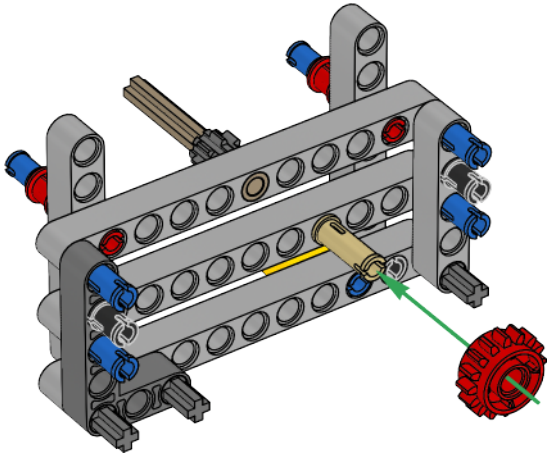

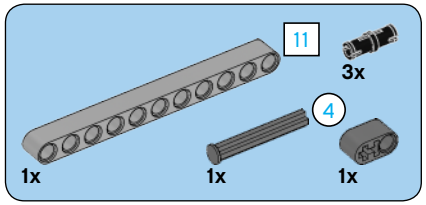

10

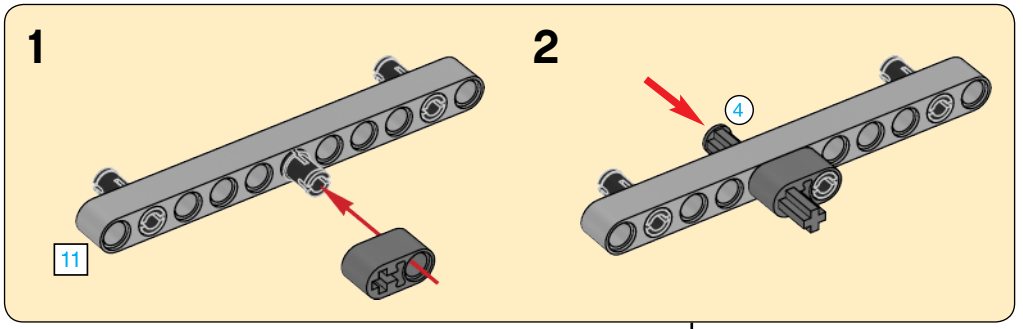

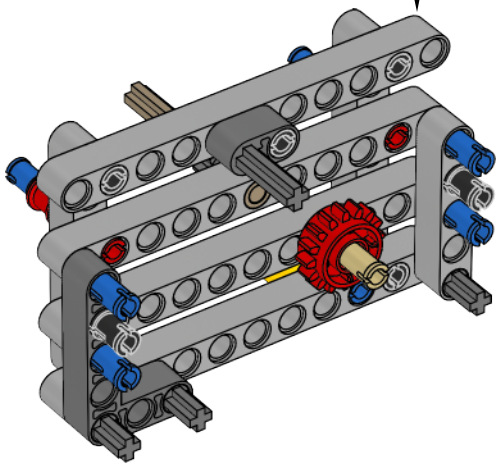

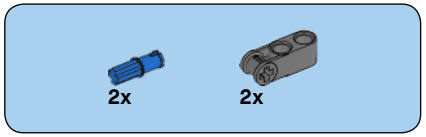

11

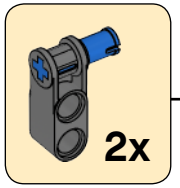

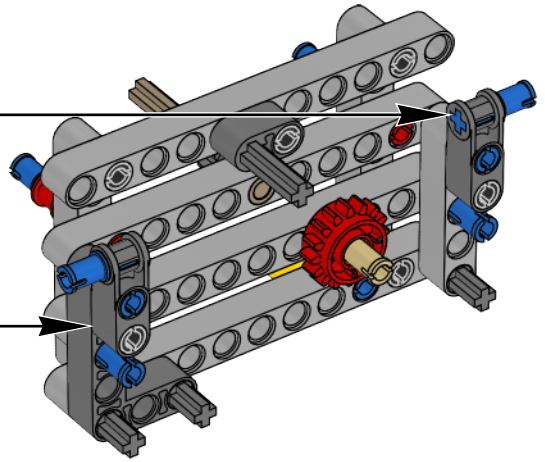

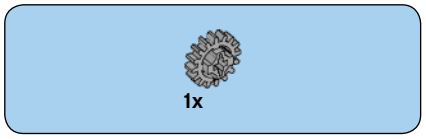

12

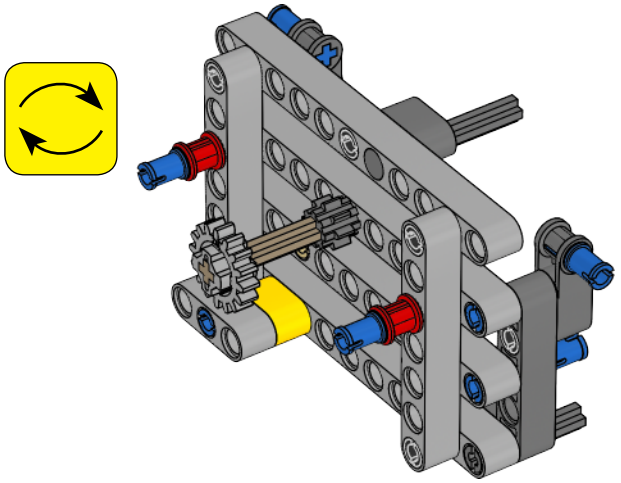

13

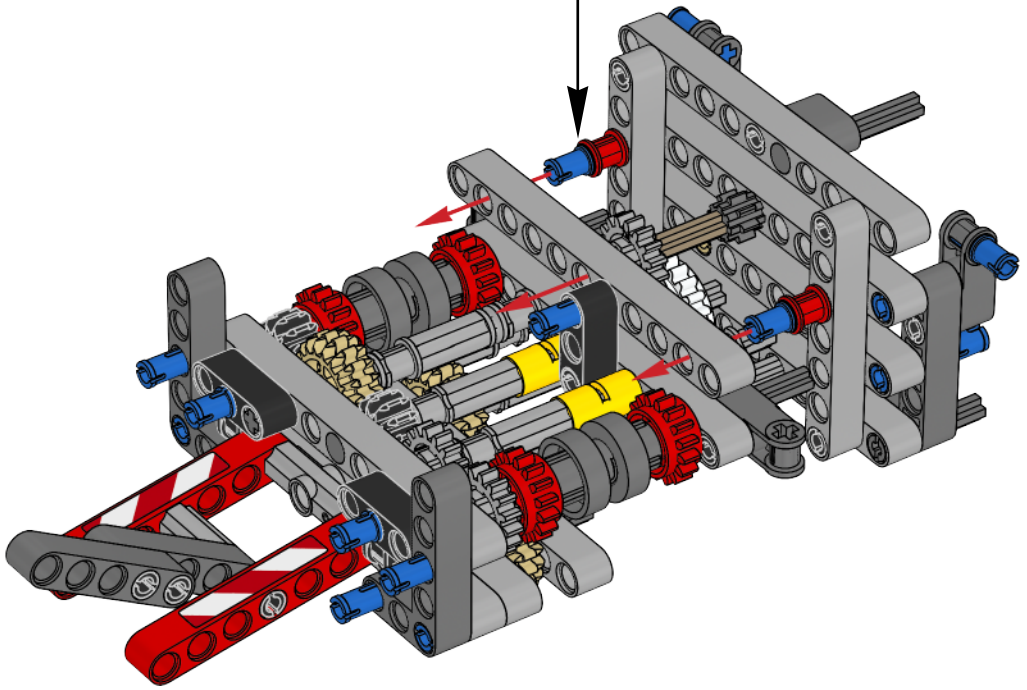

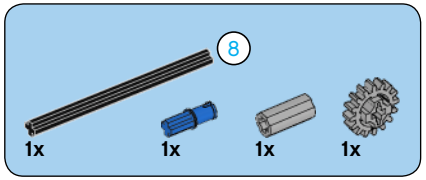

14

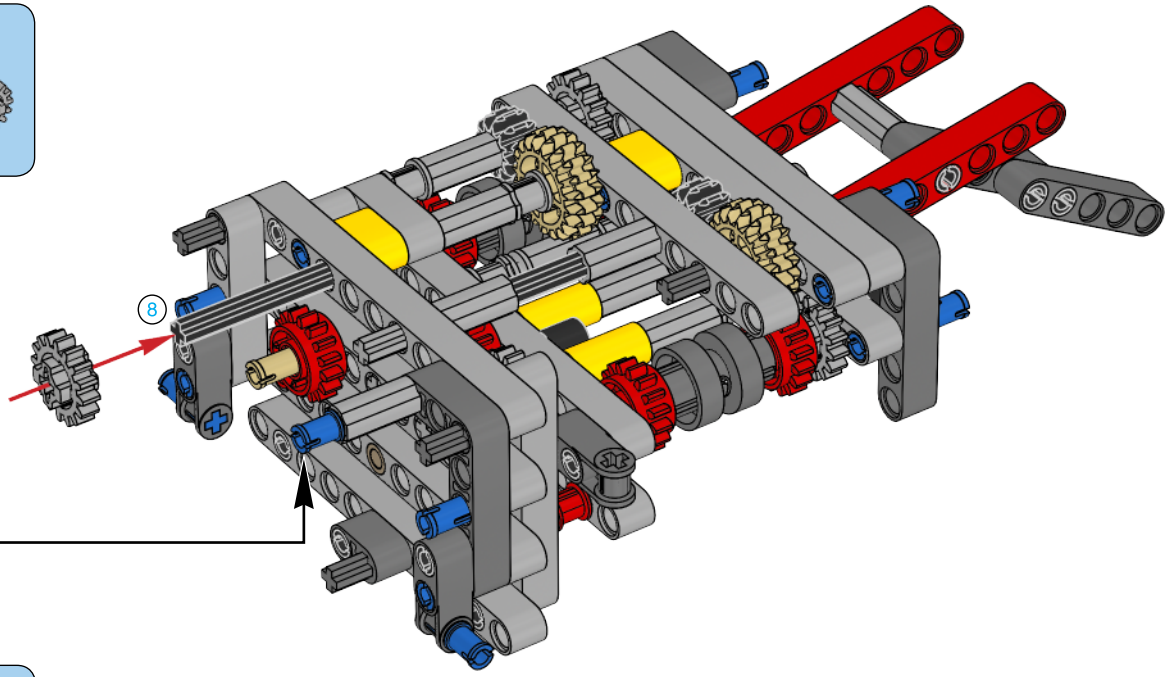

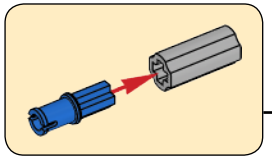

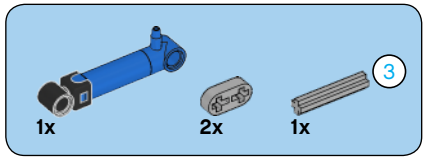

15

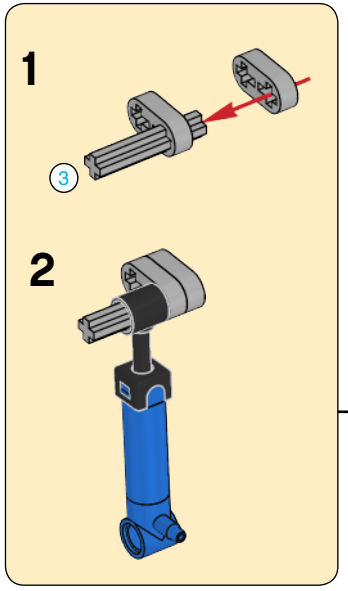

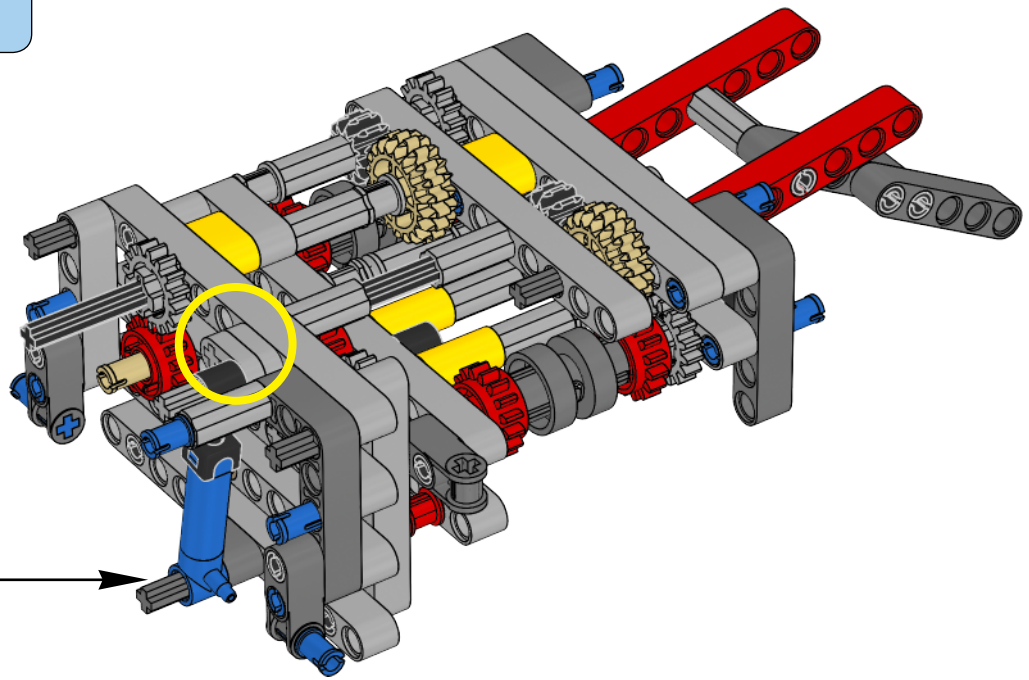

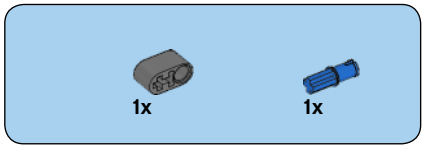

16

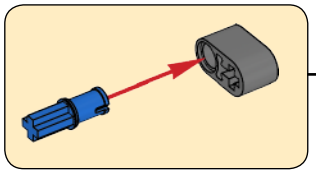

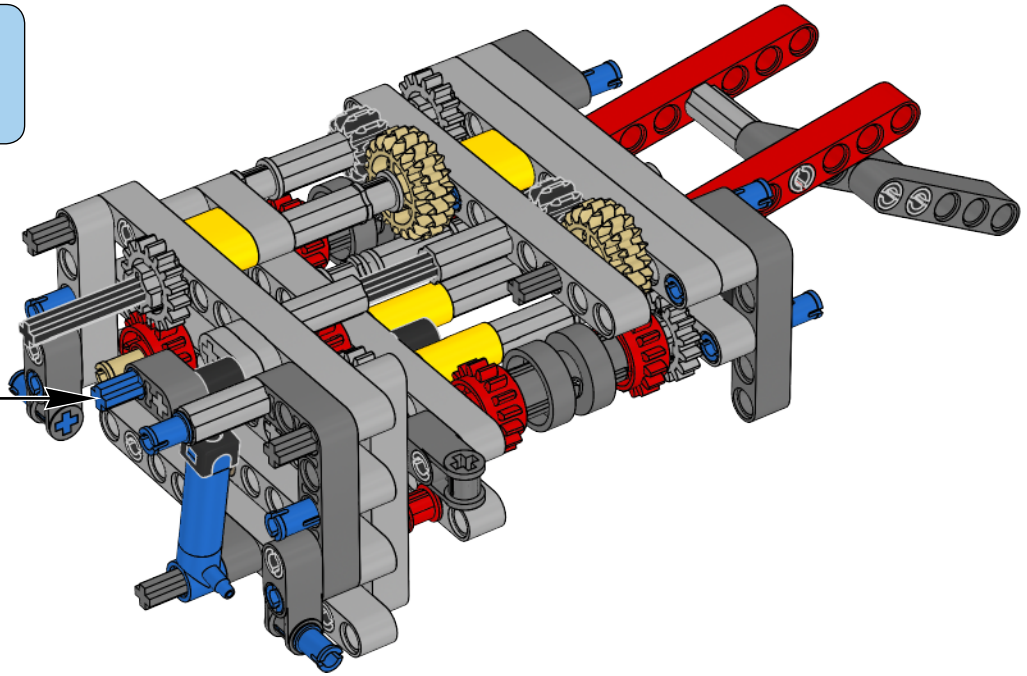

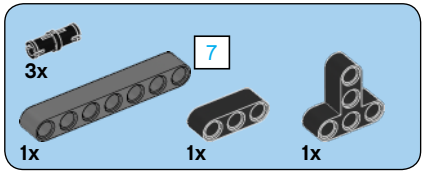

17



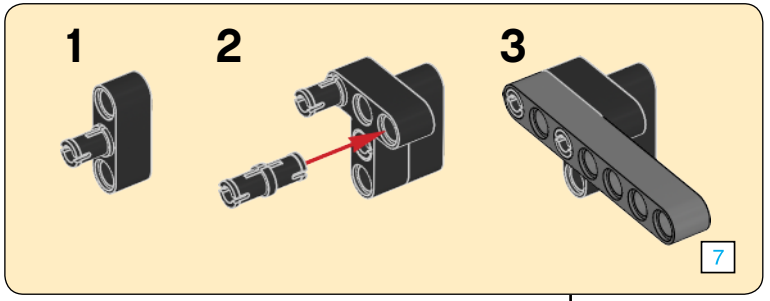

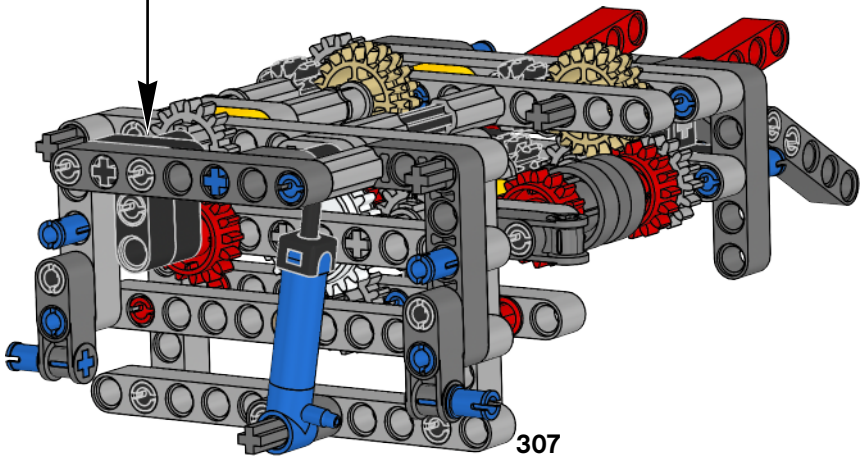

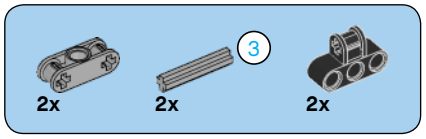

18

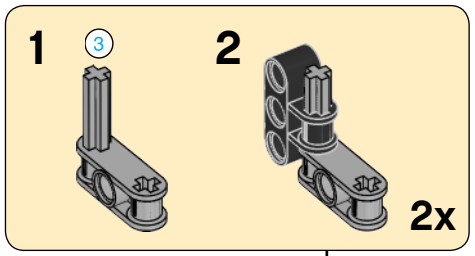

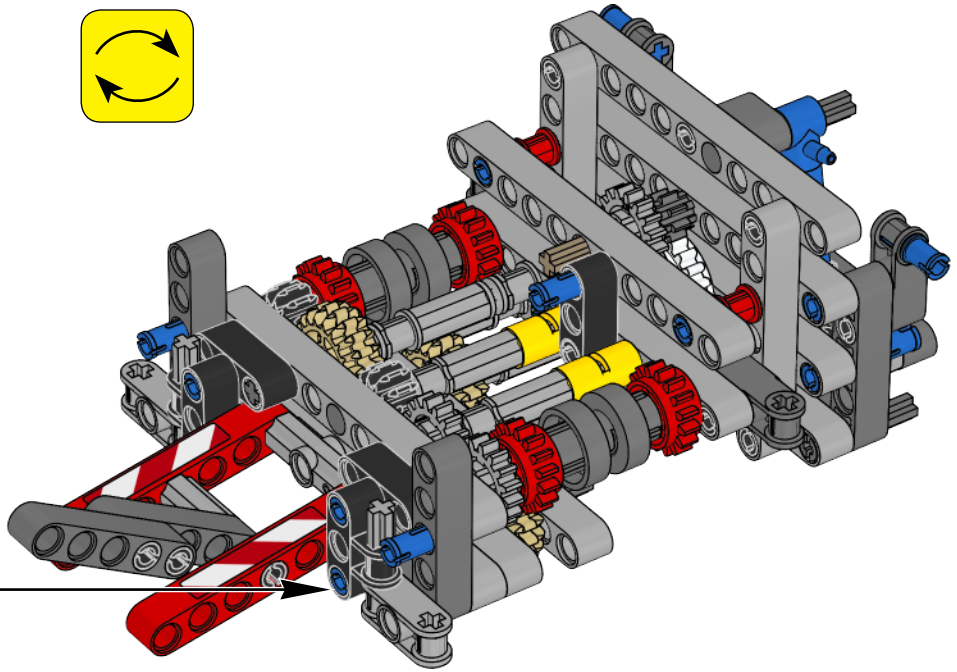

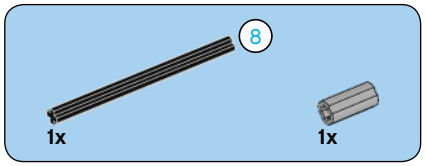

19

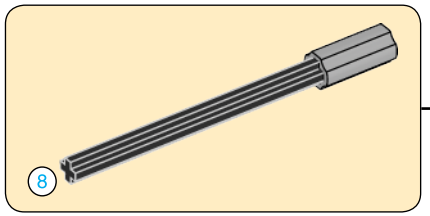

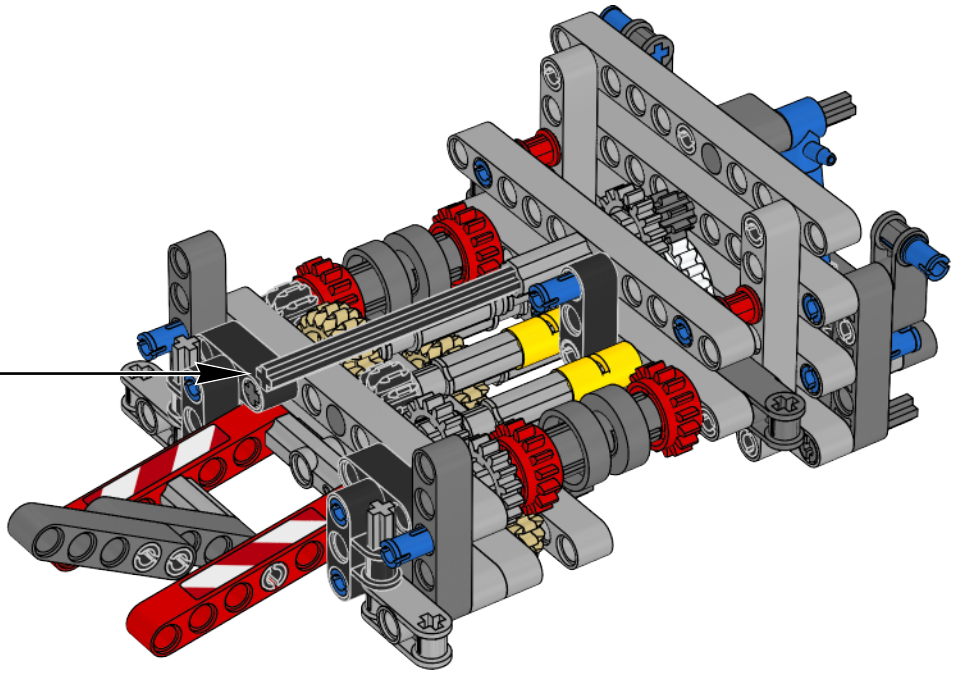

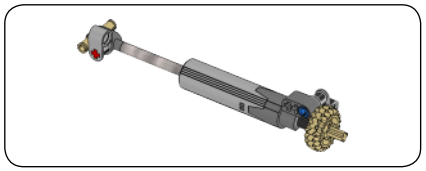

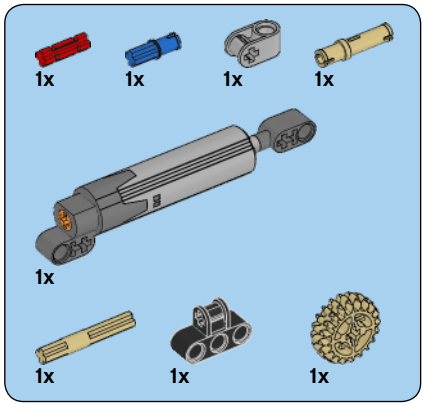

20

1



2

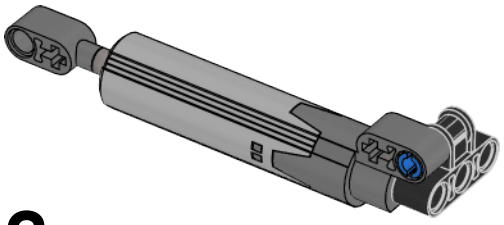

3

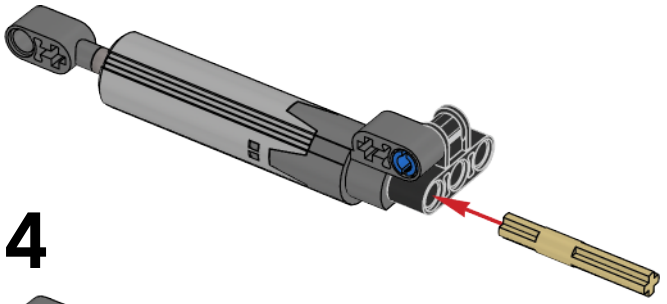

4

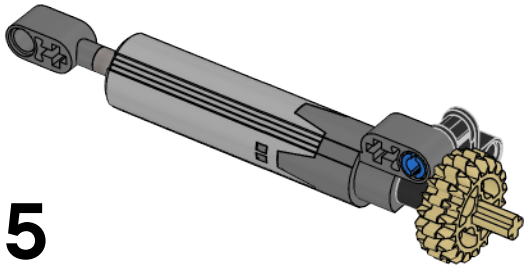

5

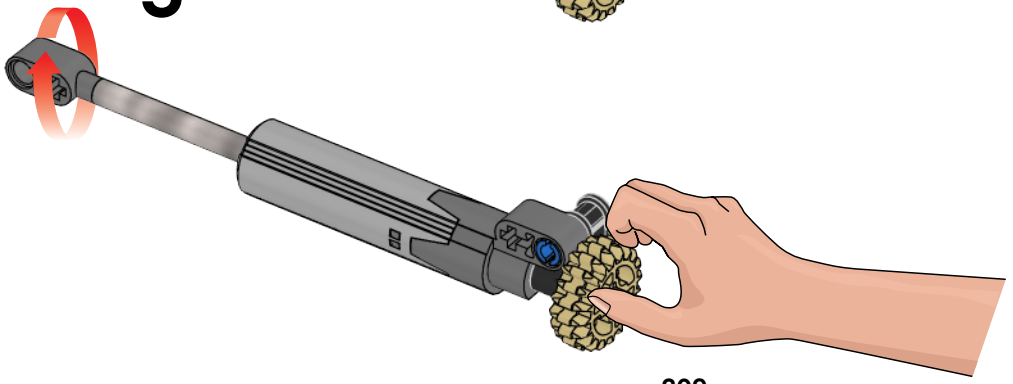

6

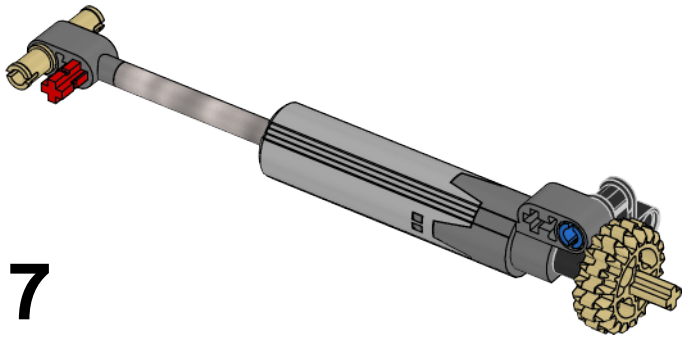

7

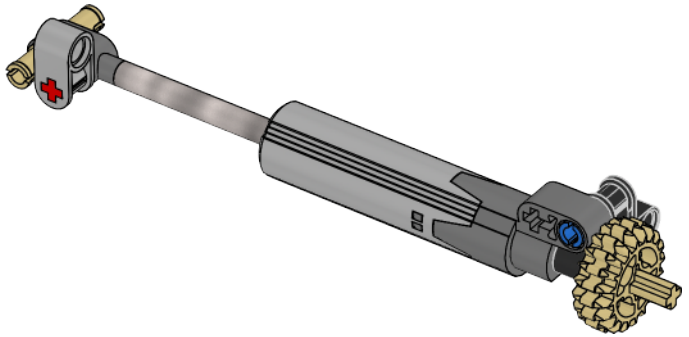

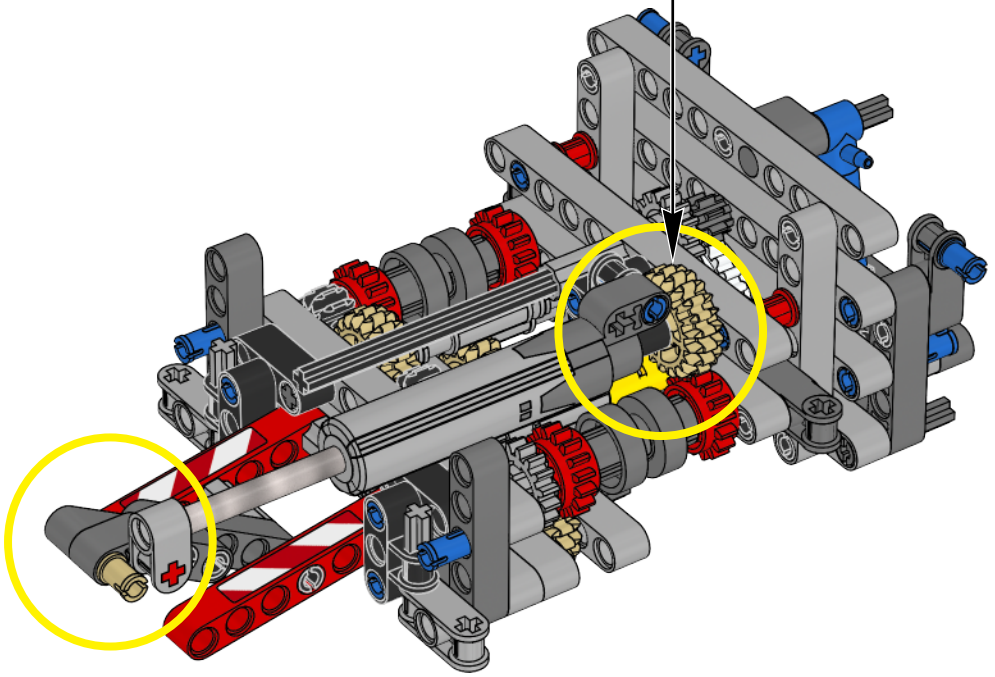

44

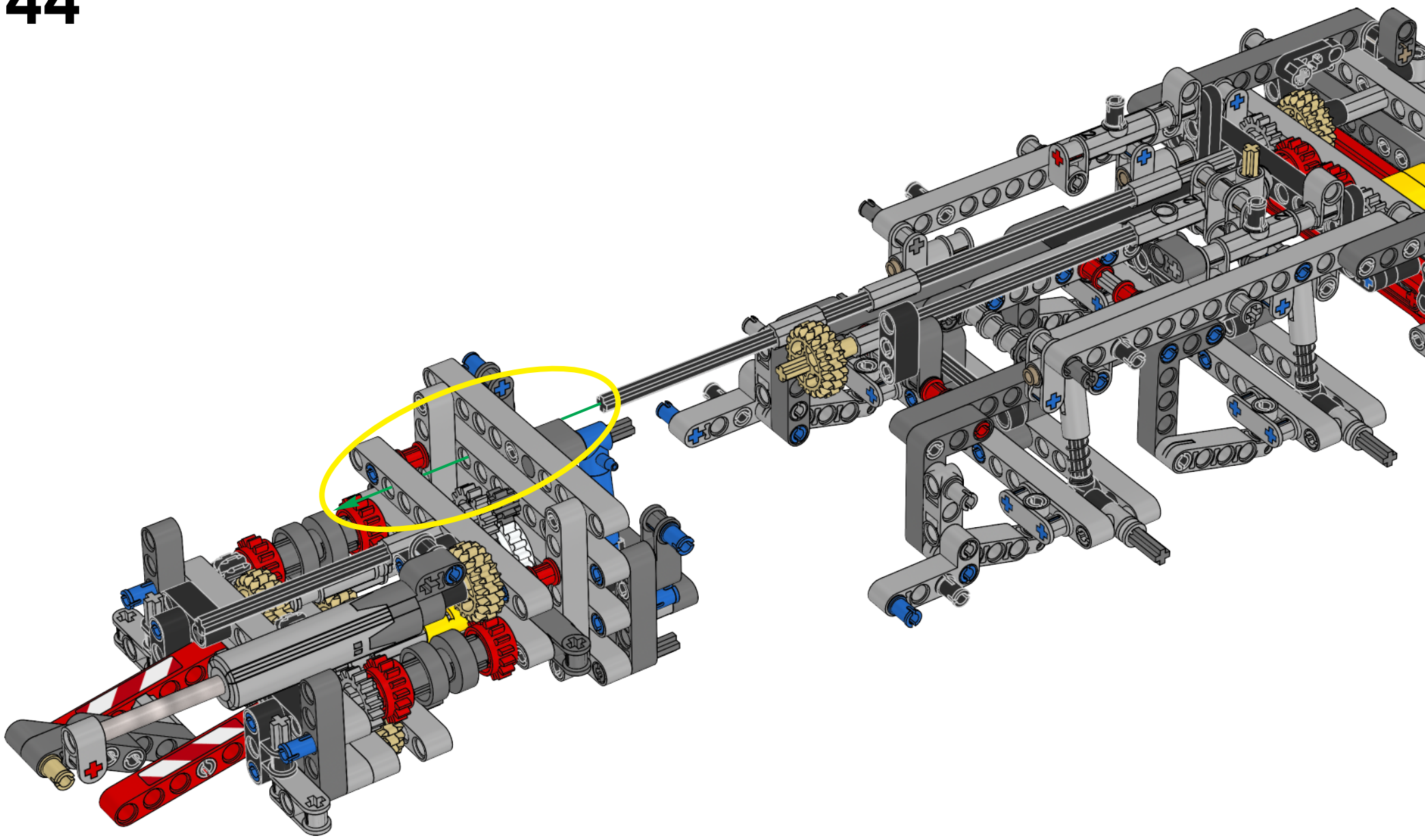

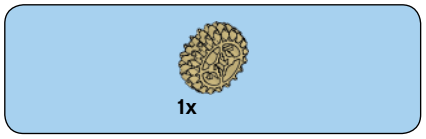

45

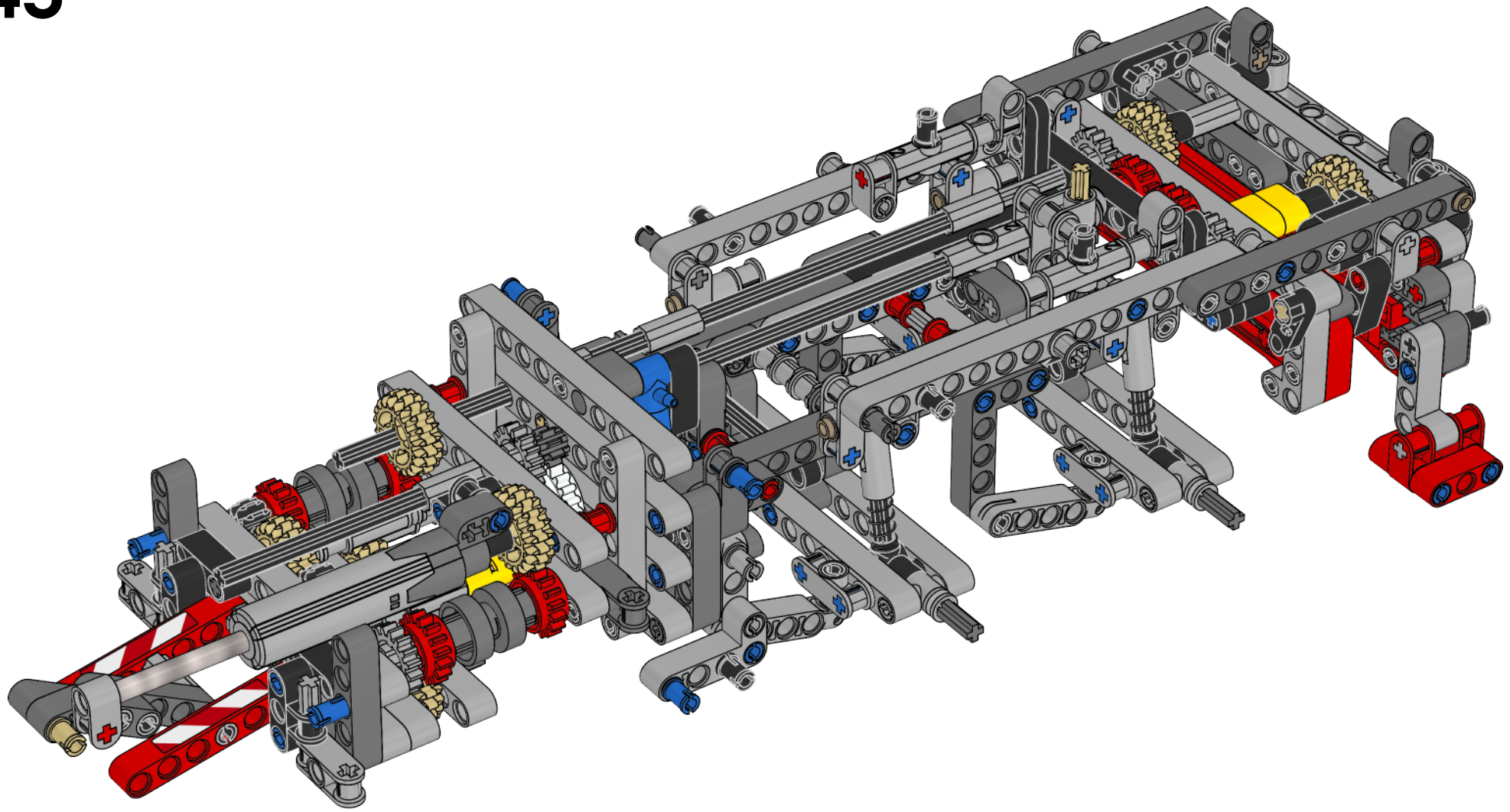

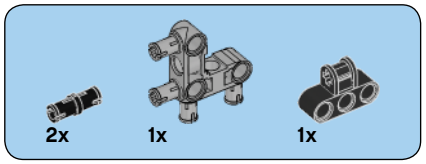

46

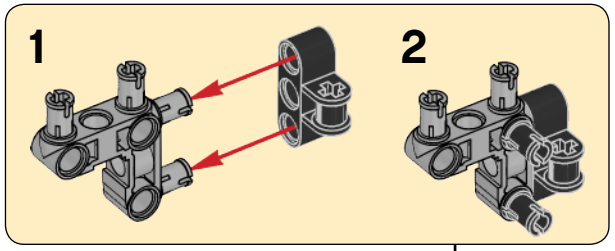

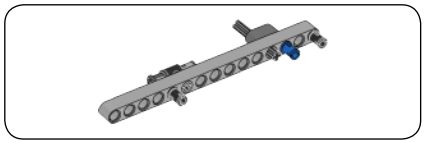

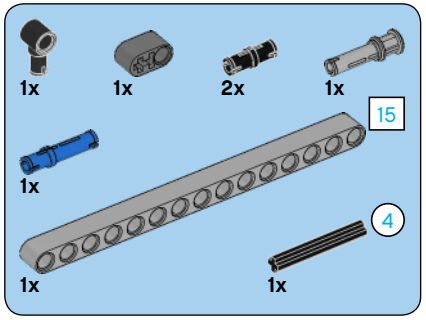

47

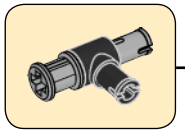

1

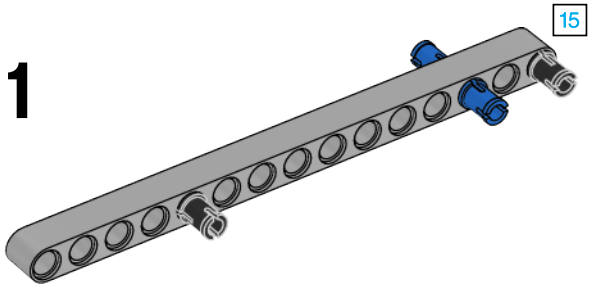

2

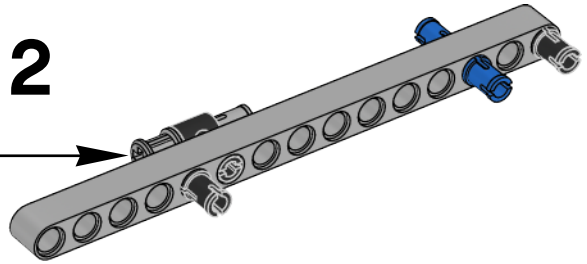

3

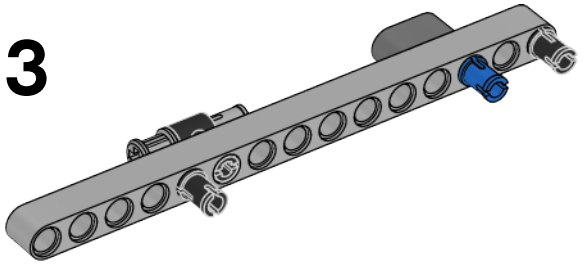

4

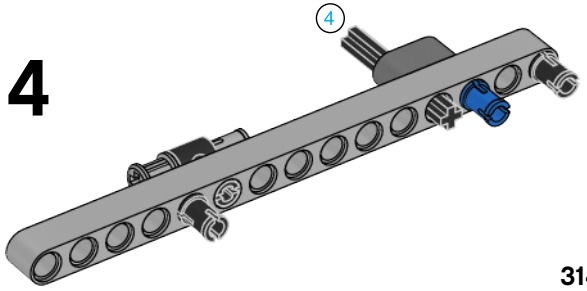

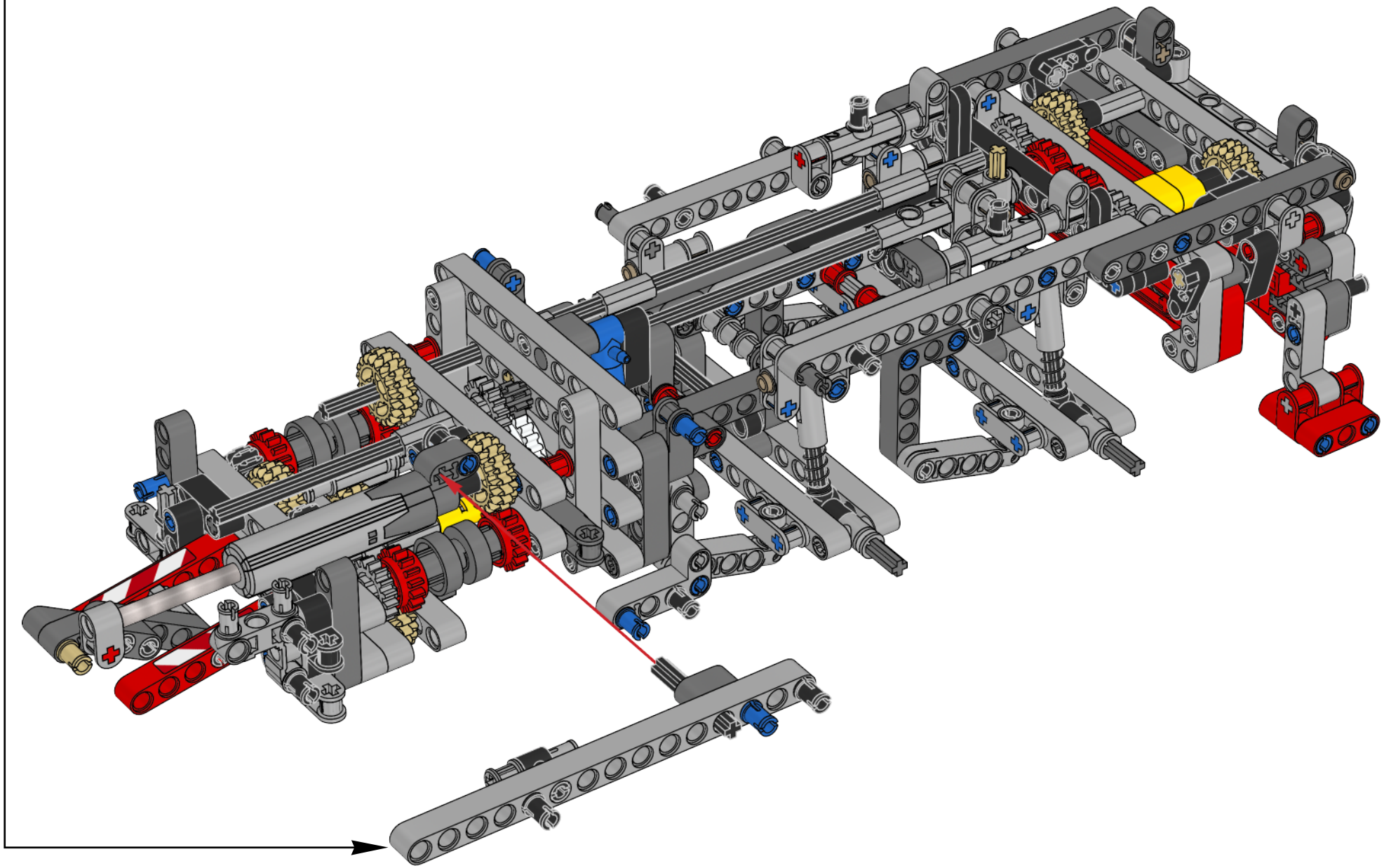

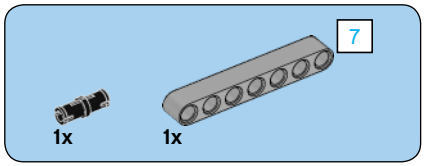

48

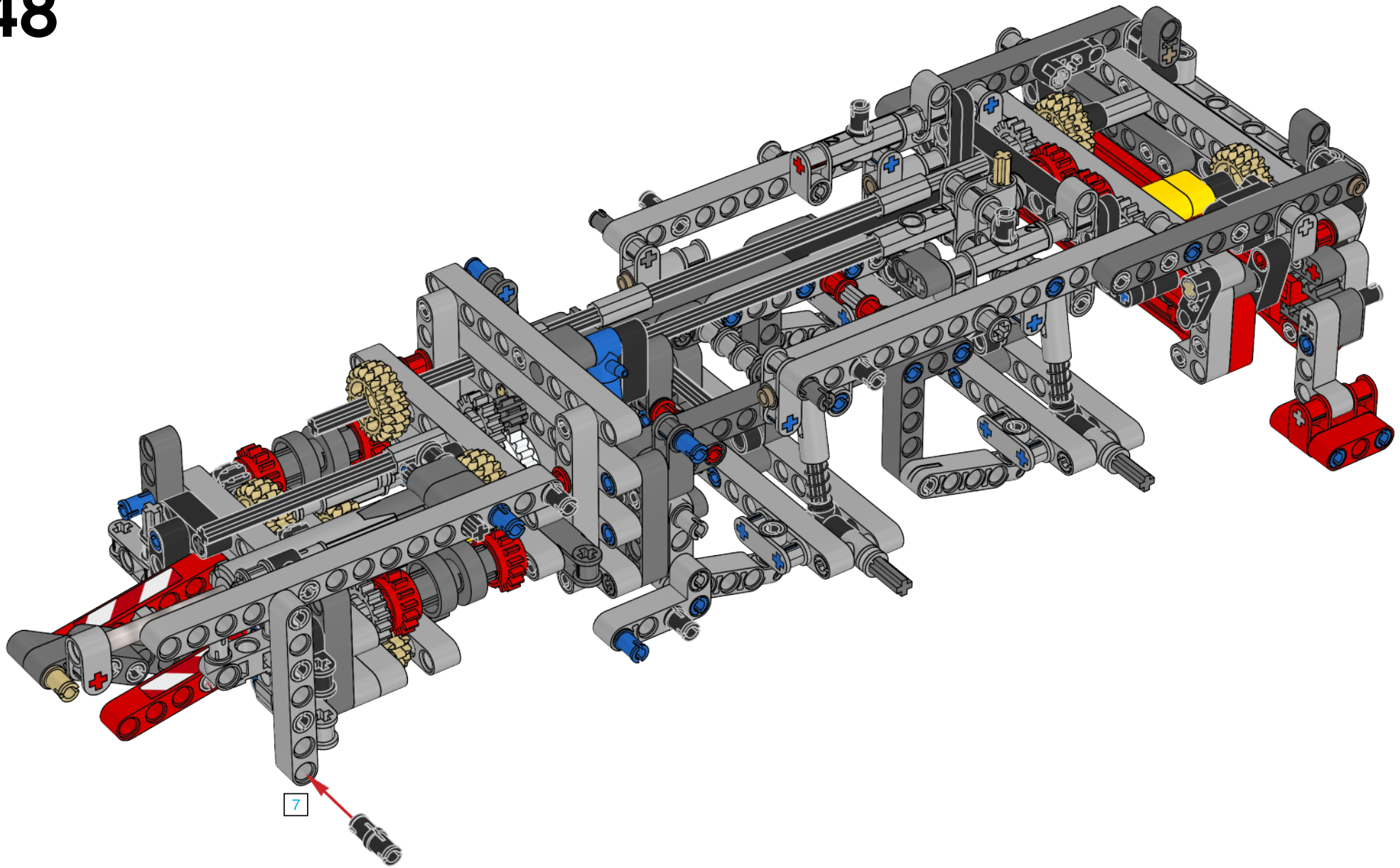

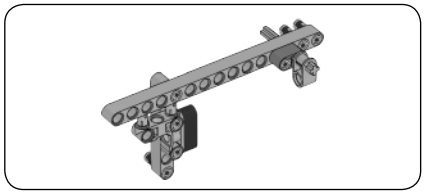

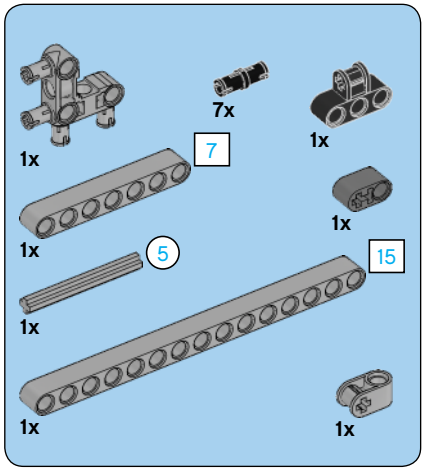

49

1

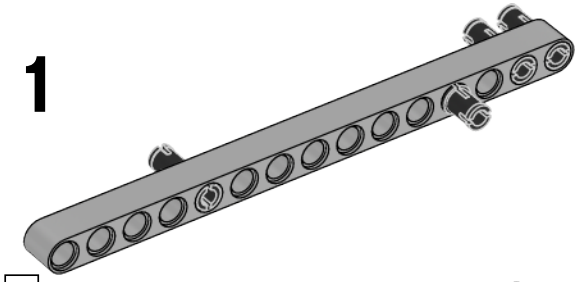

15

2

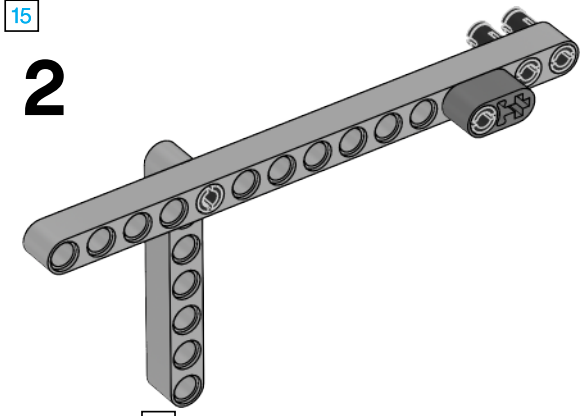

7

3

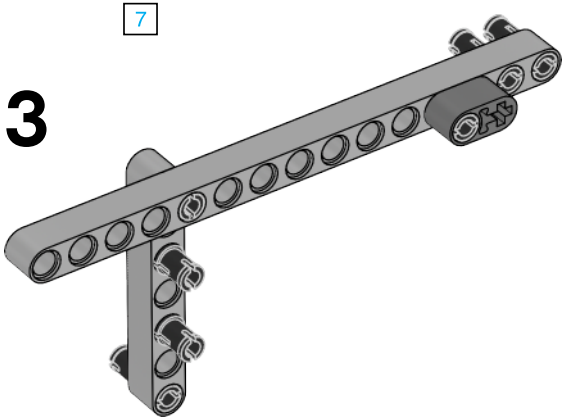

4

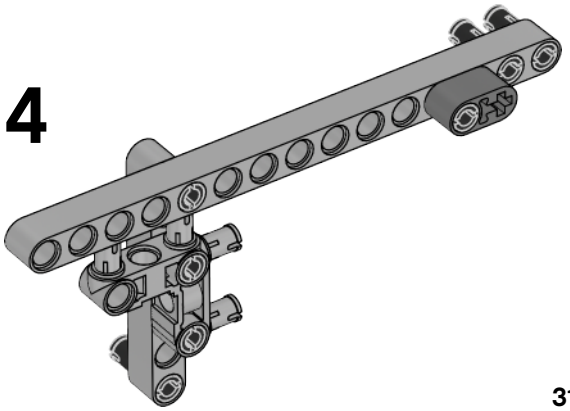

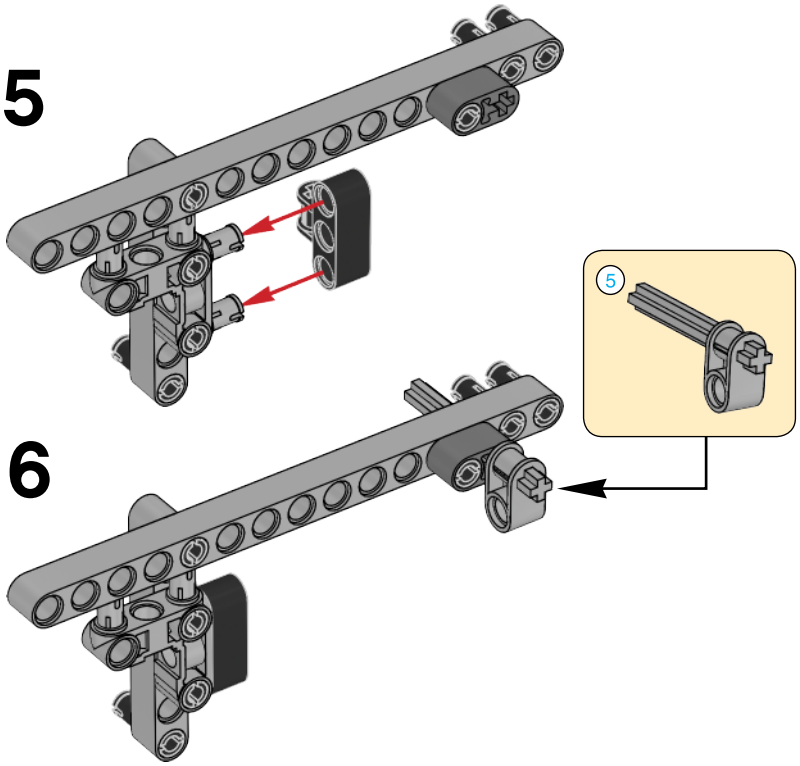
5
6
5

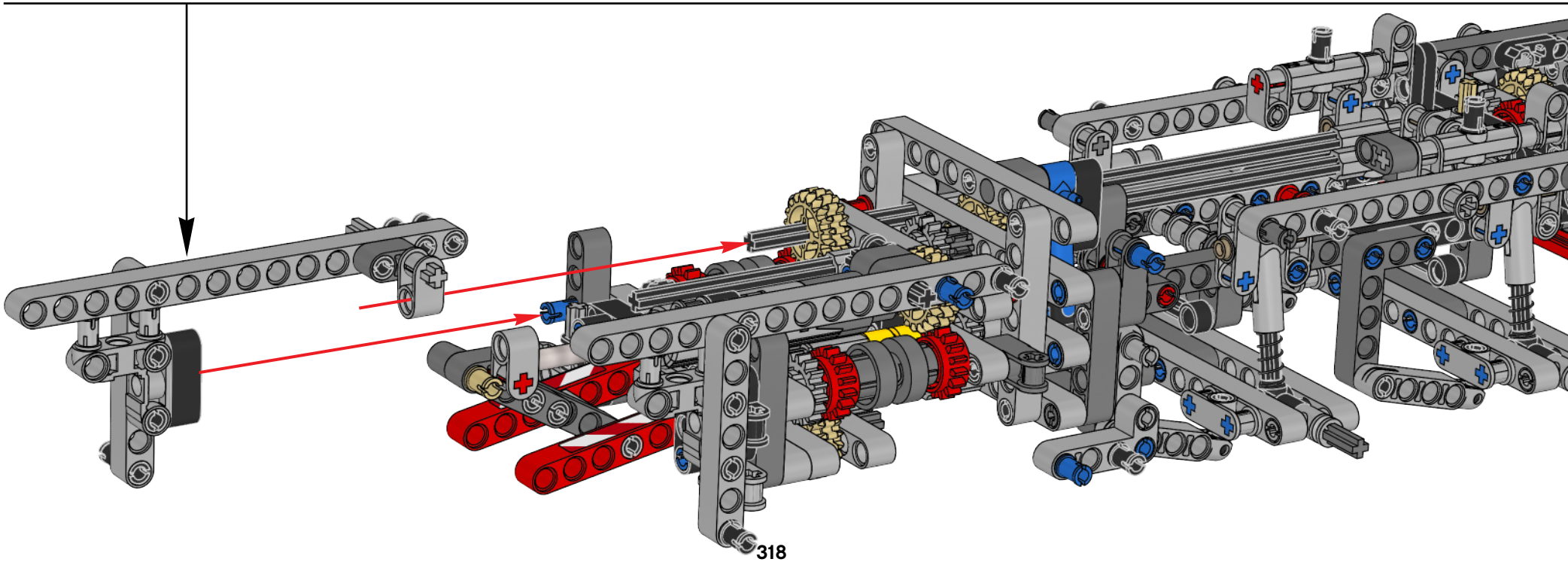

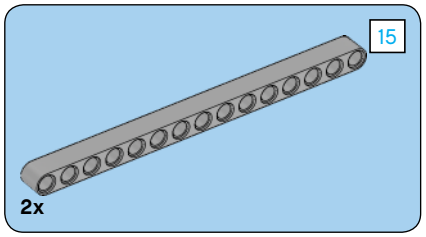

50

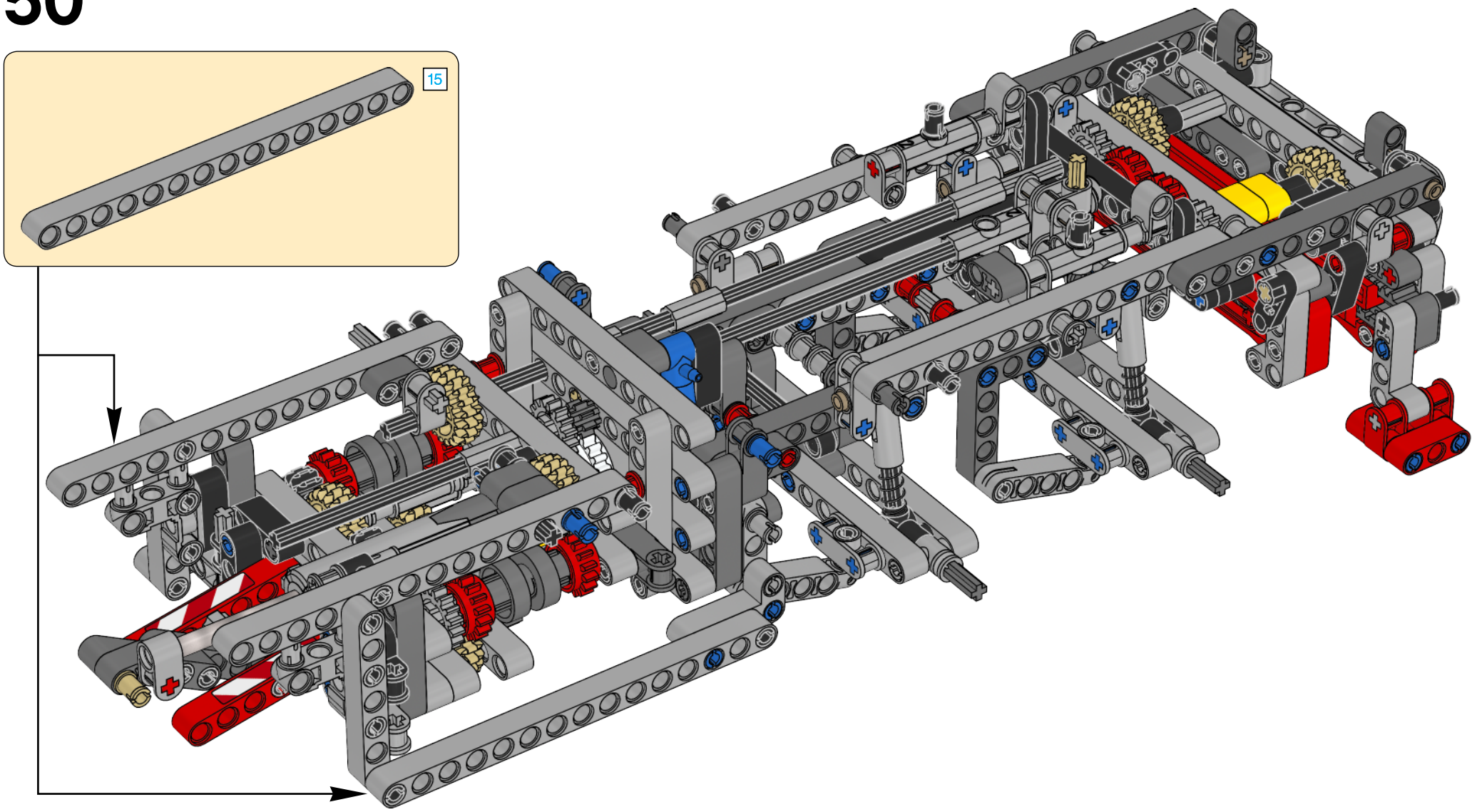

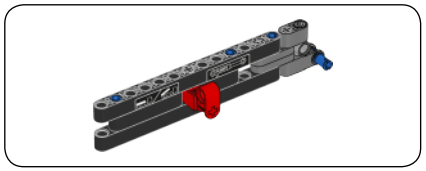

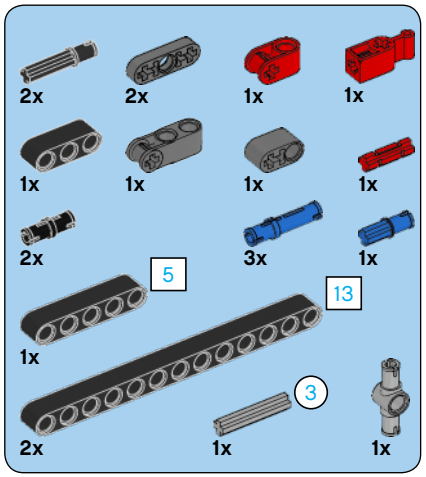

51

1

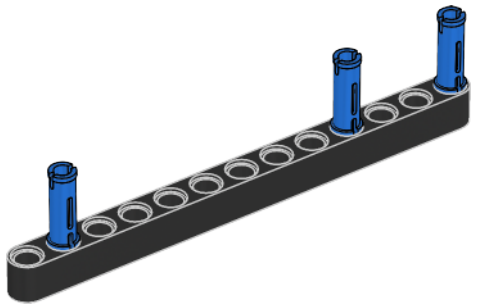

2

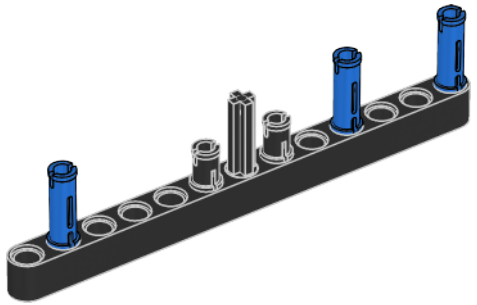

3

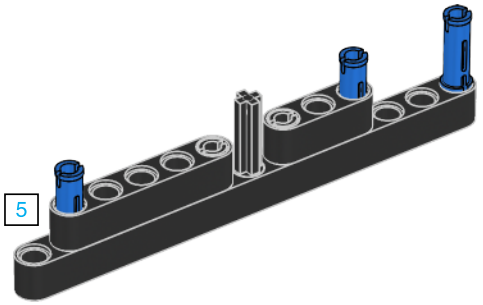

4

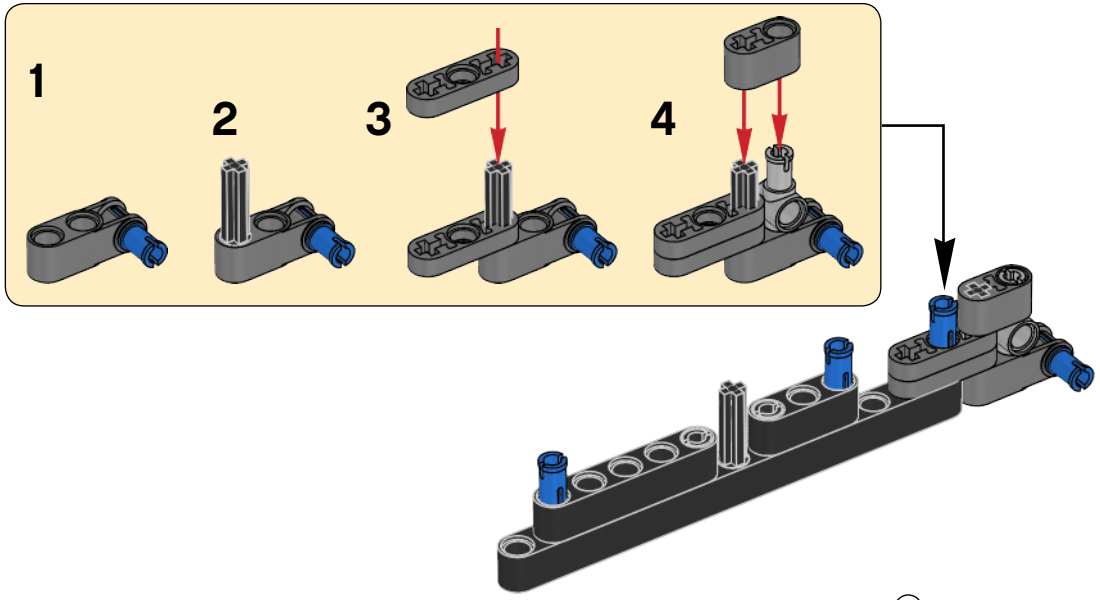

5

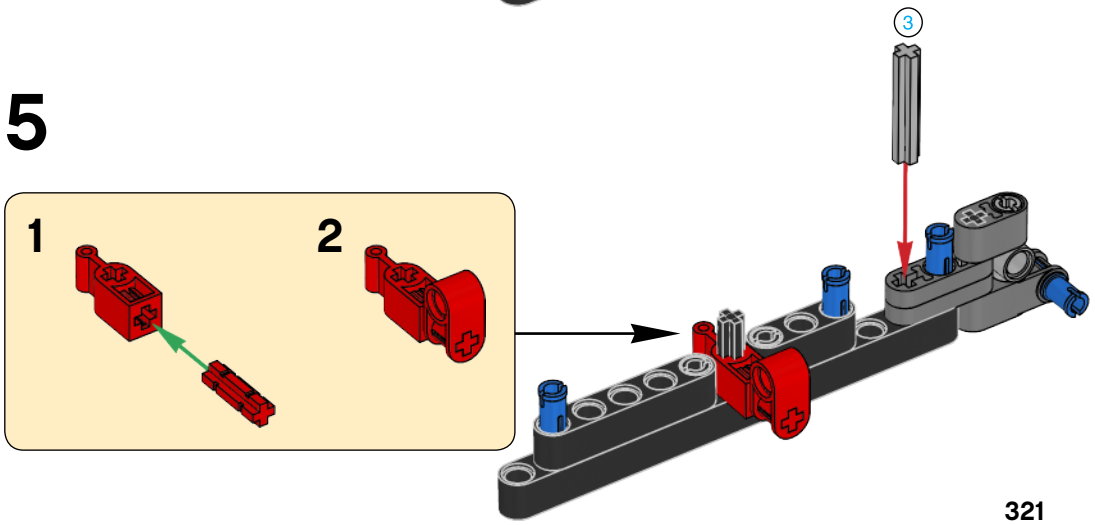

6

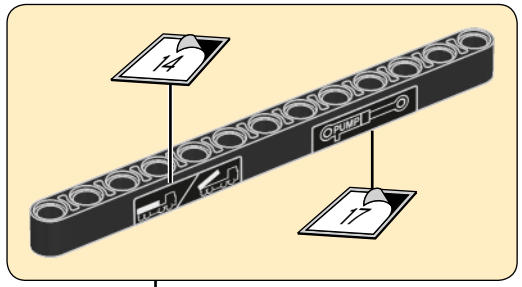

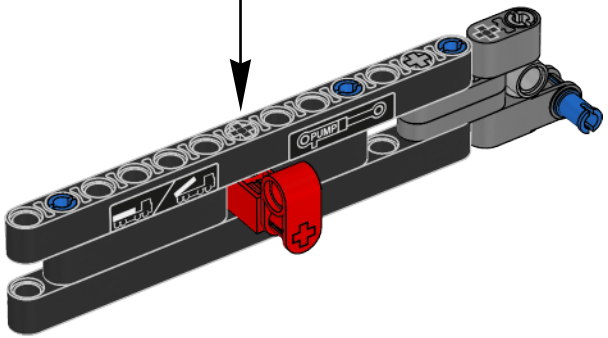

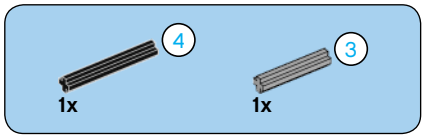

52

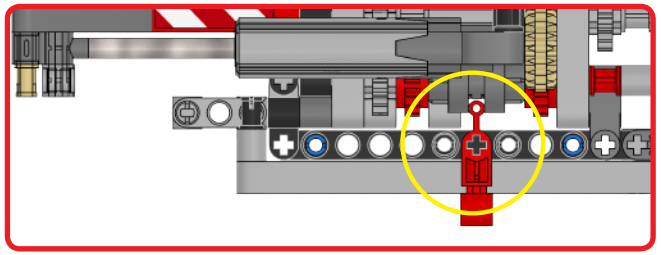

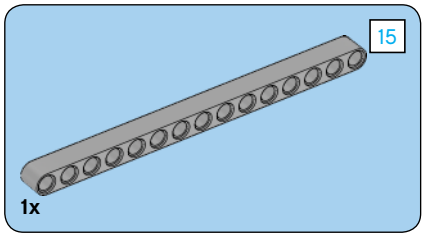

53

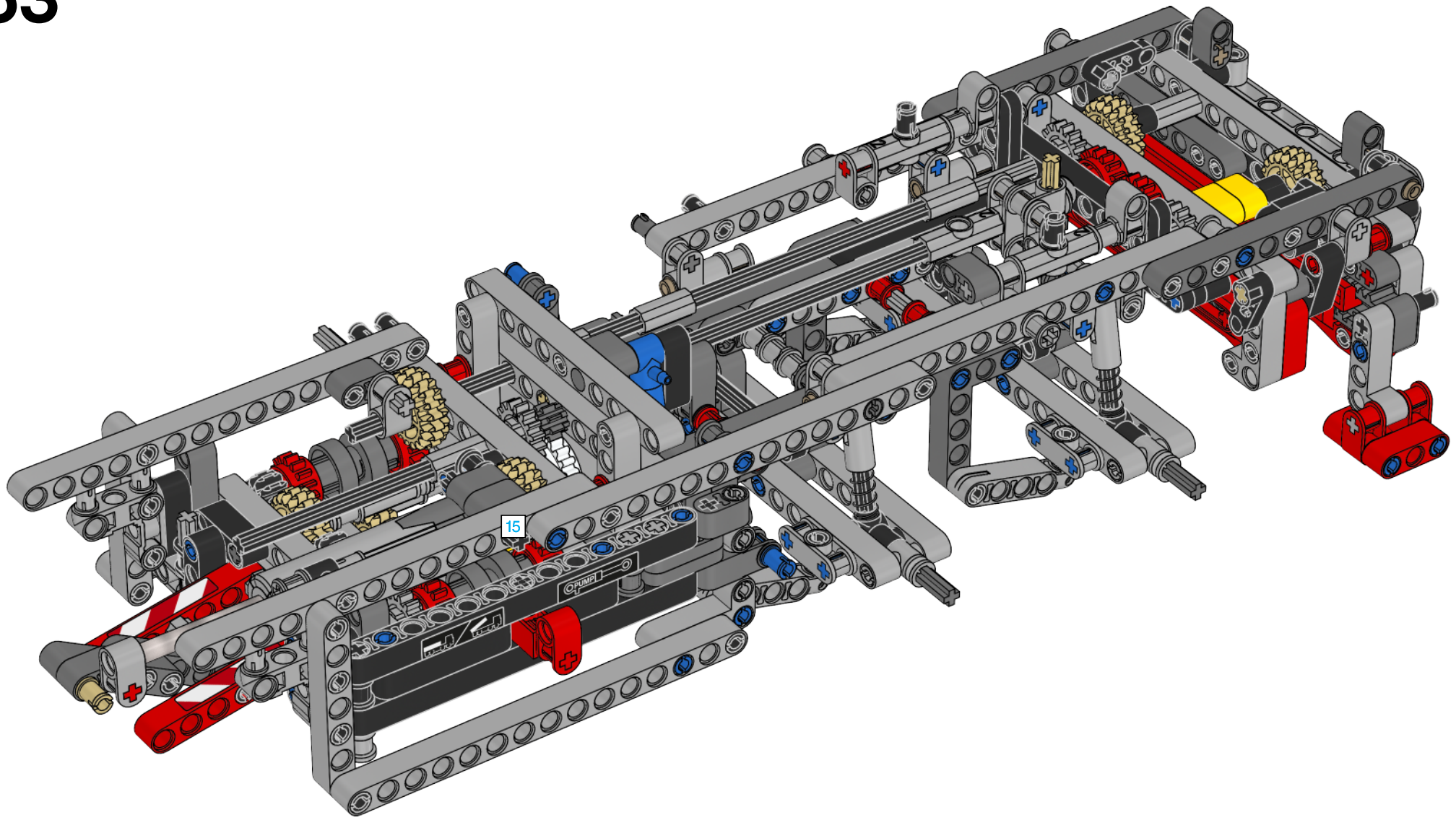

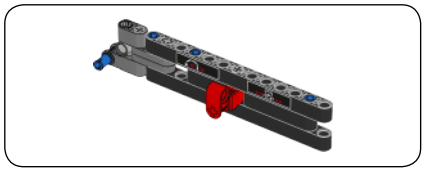

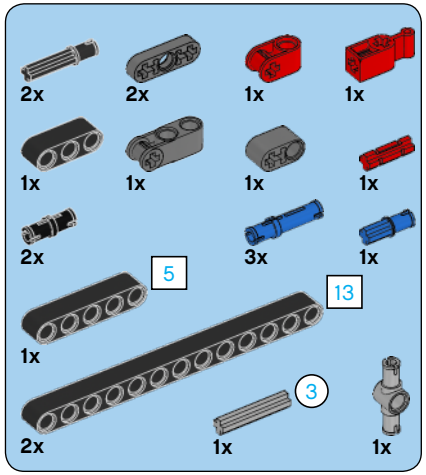

54

1

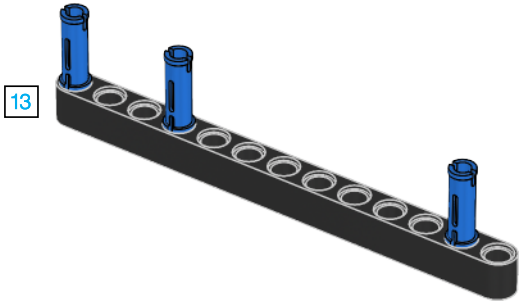

2

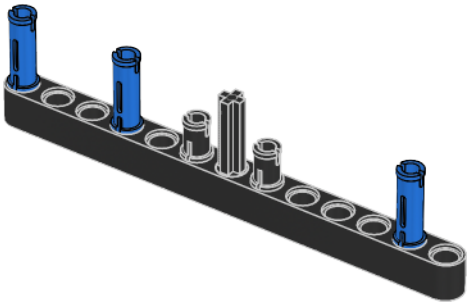

3

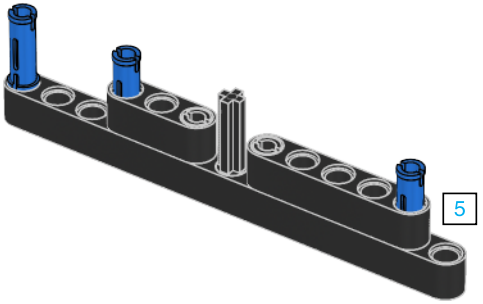

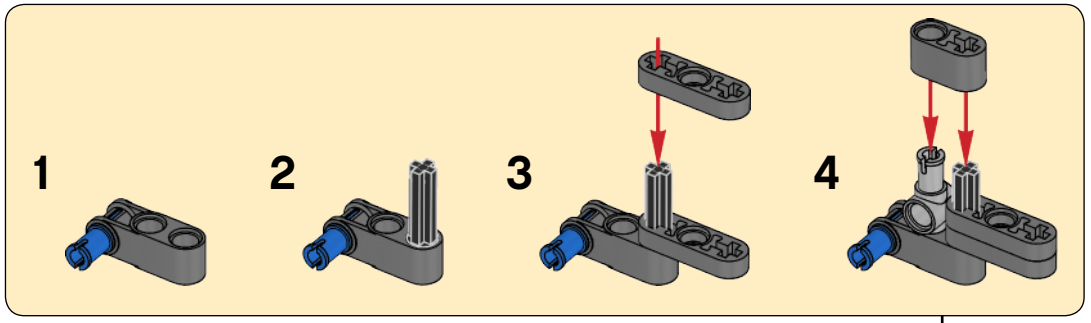

4

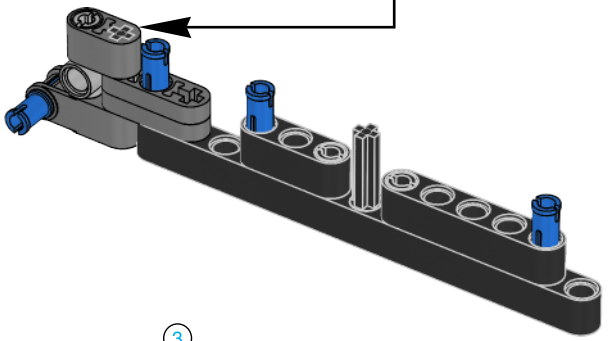

5

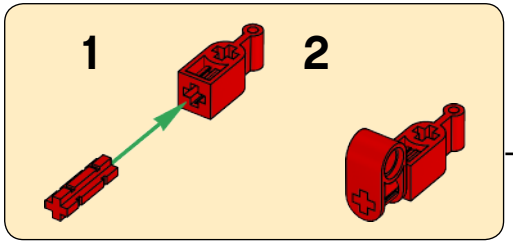

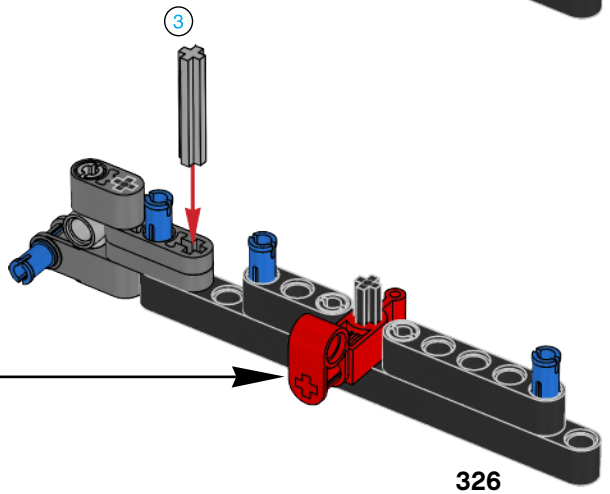

6

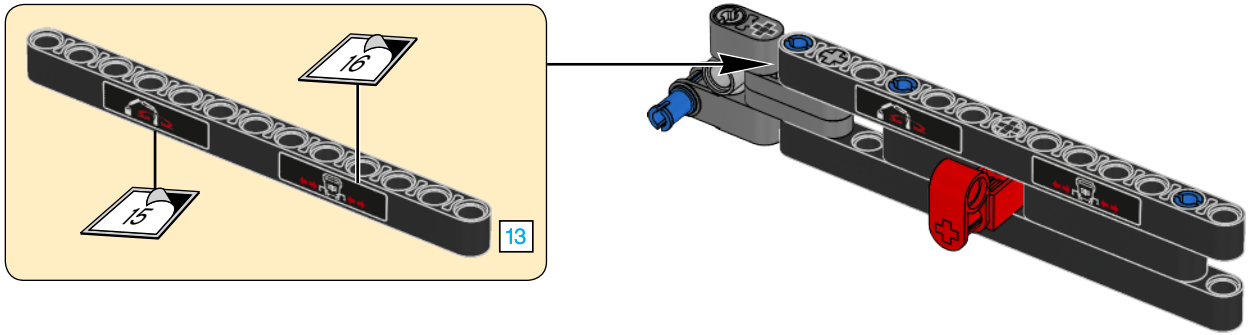

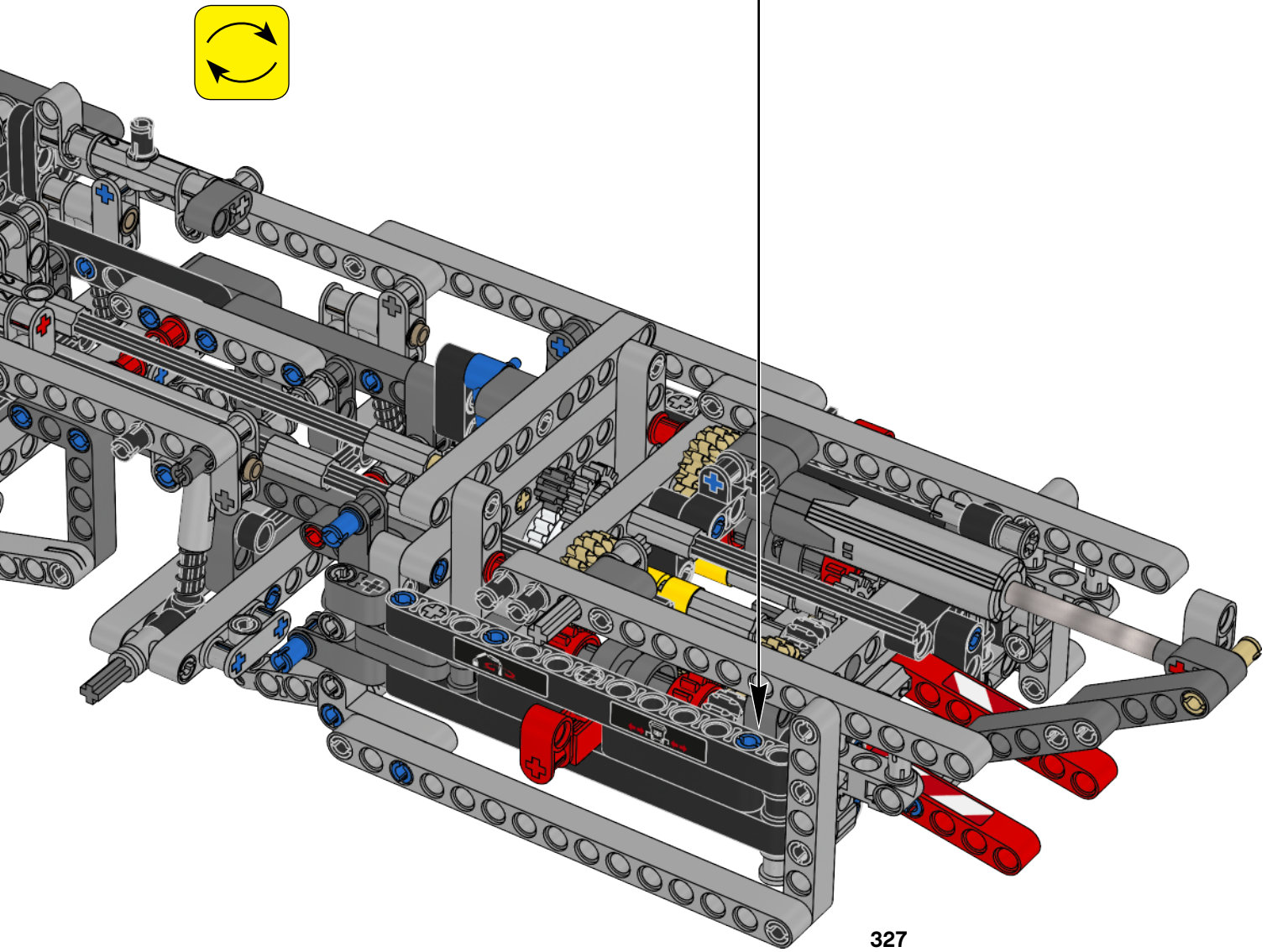

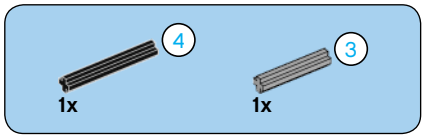

55

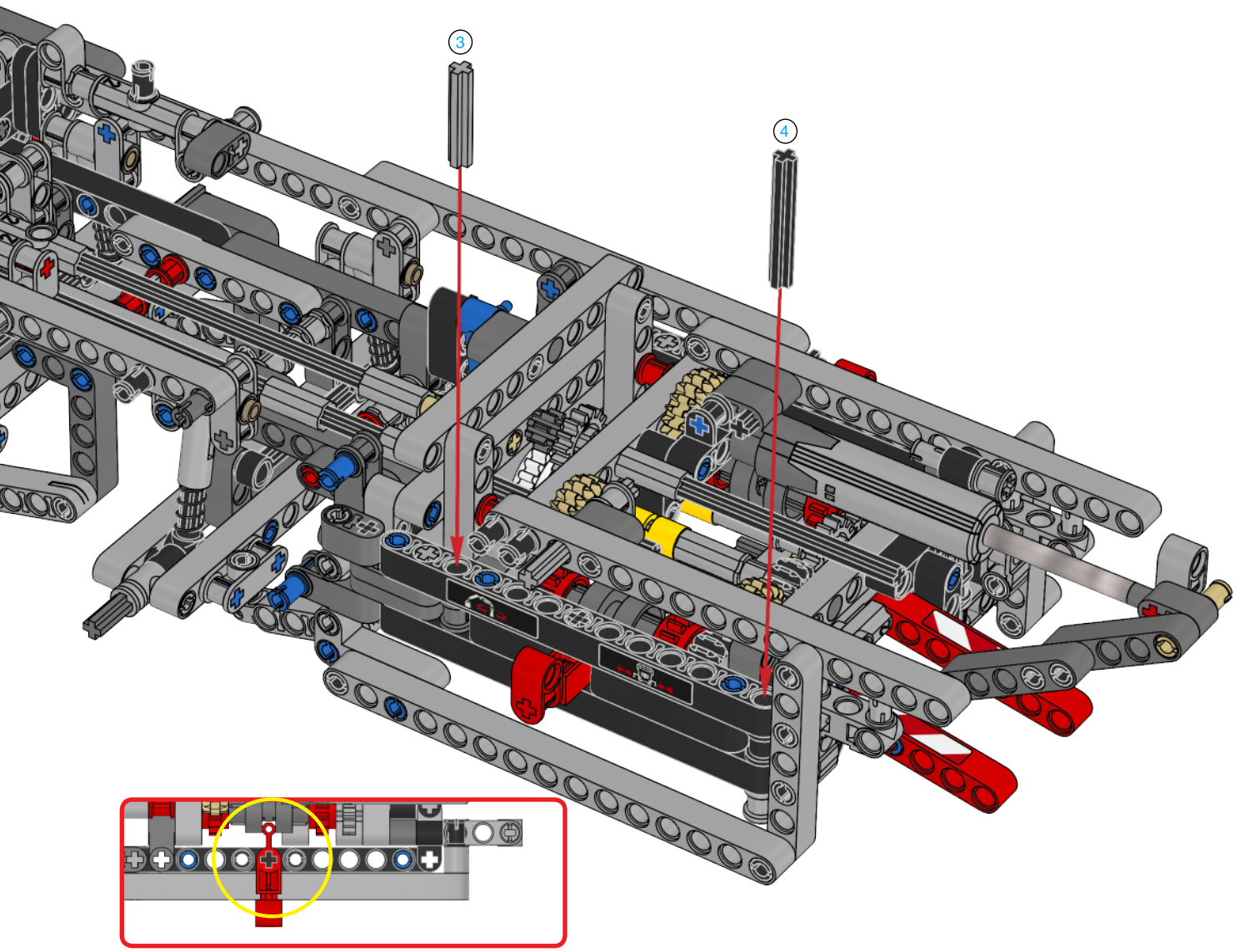

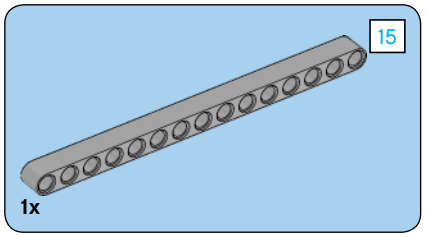

56

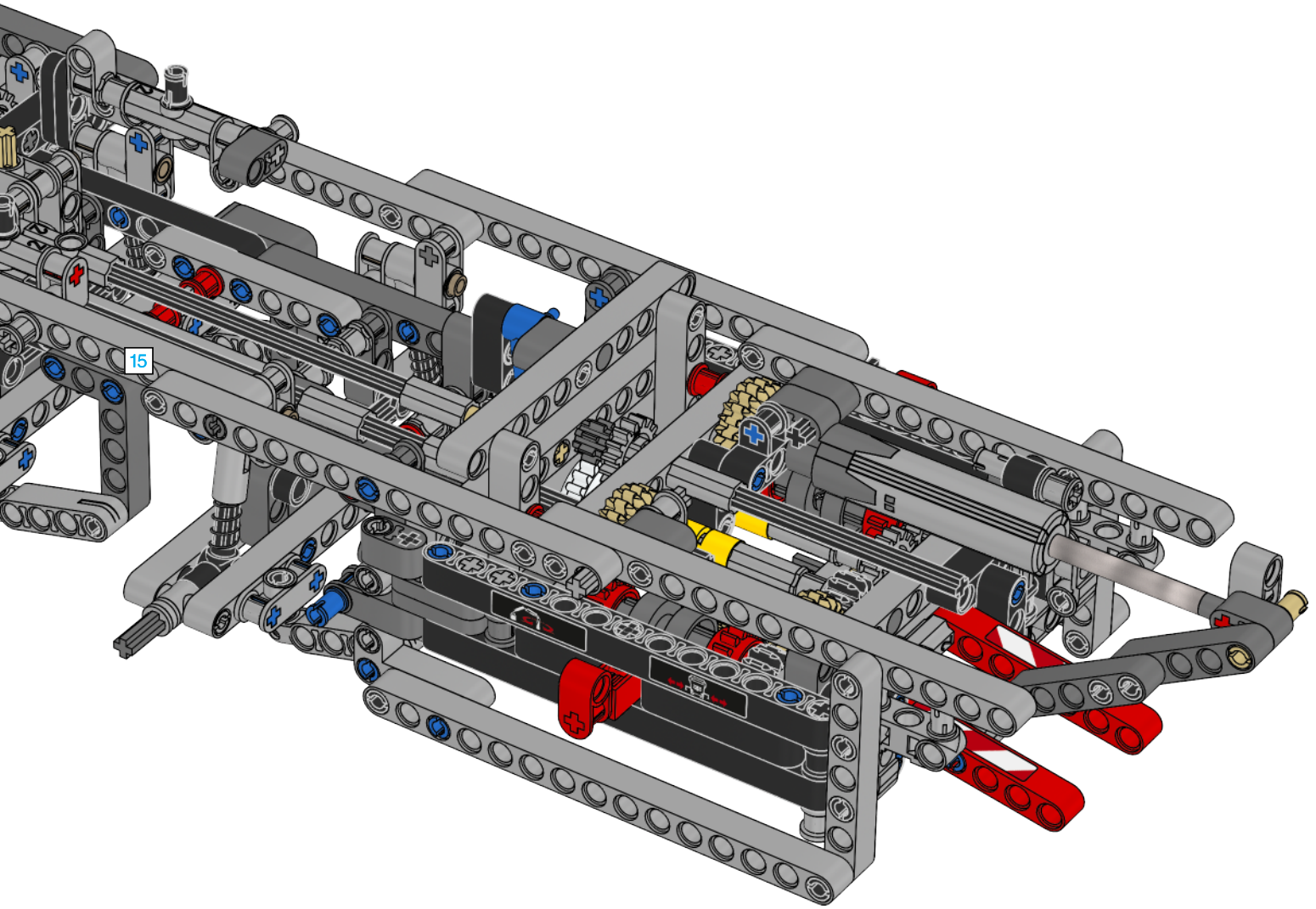

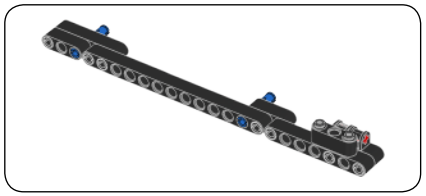

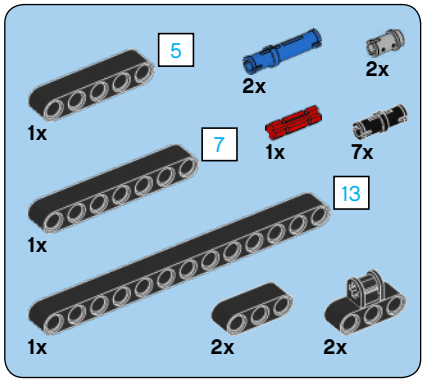

57

1

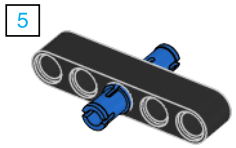

2

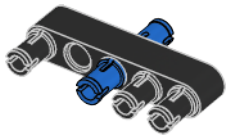

3

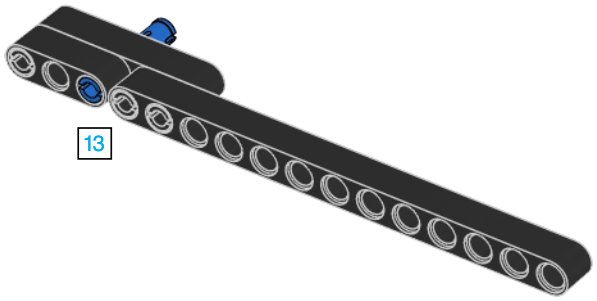

4

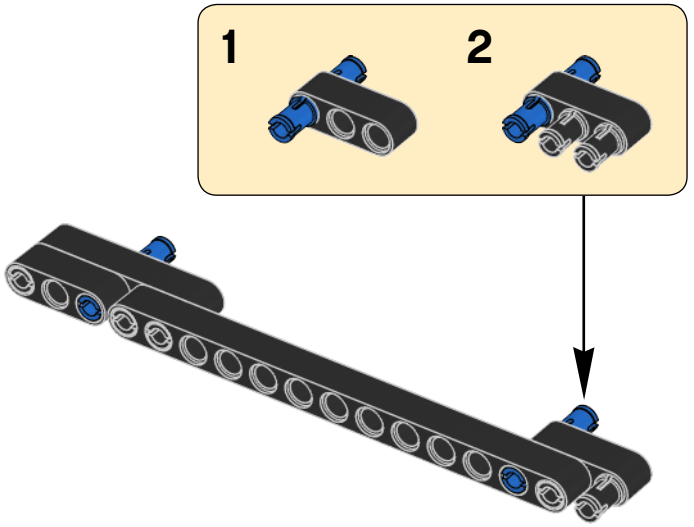

5

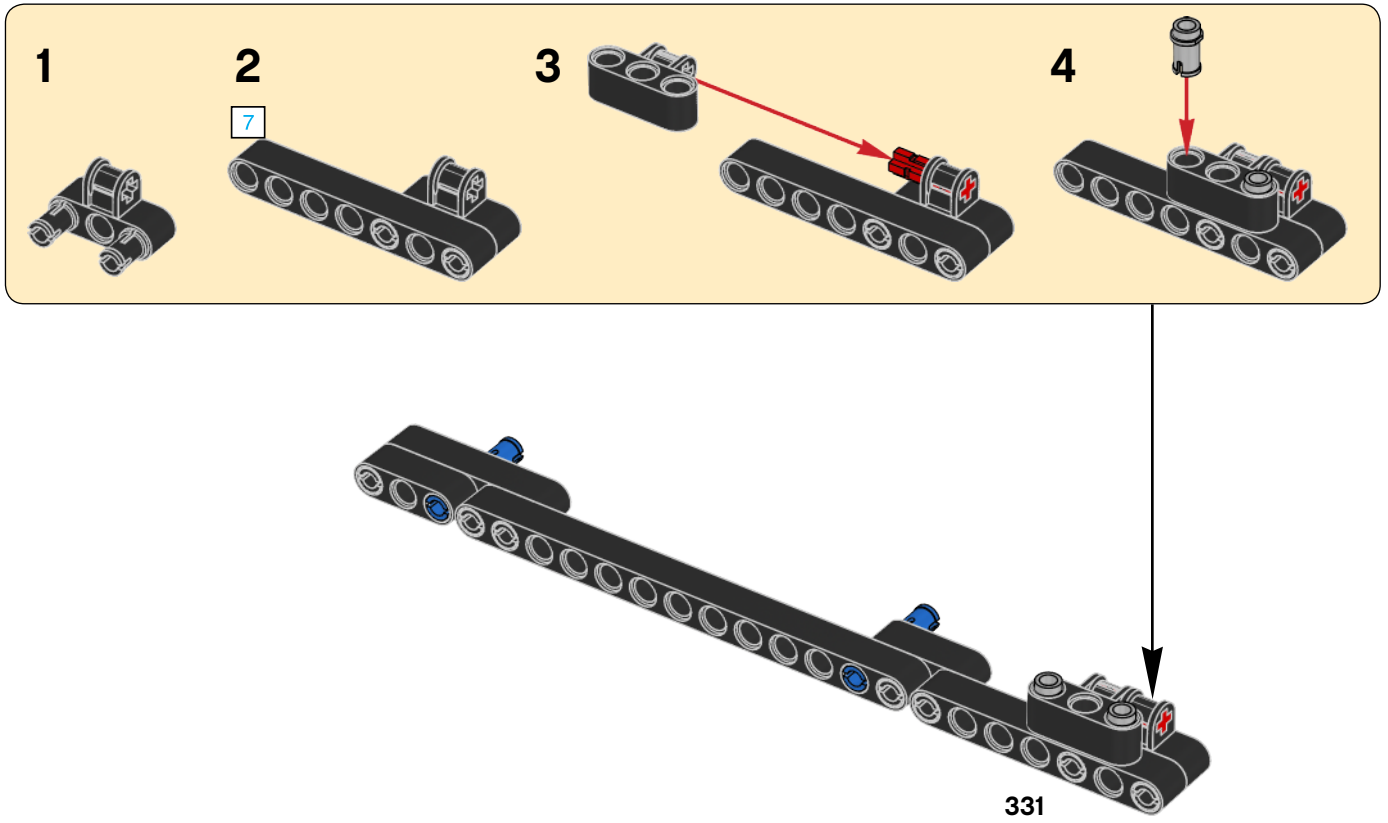

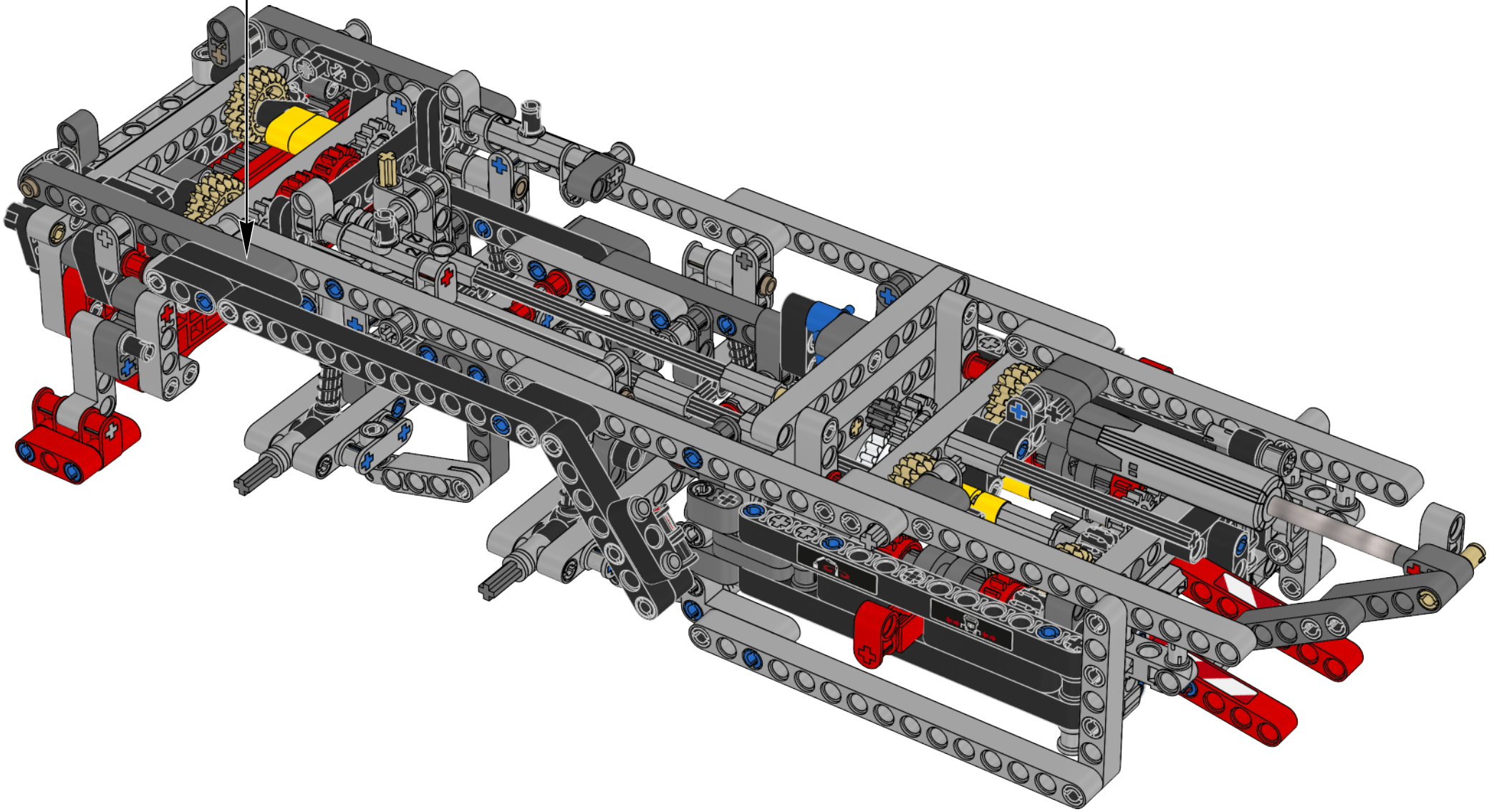

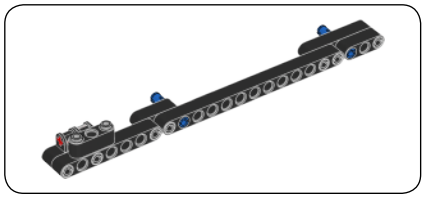

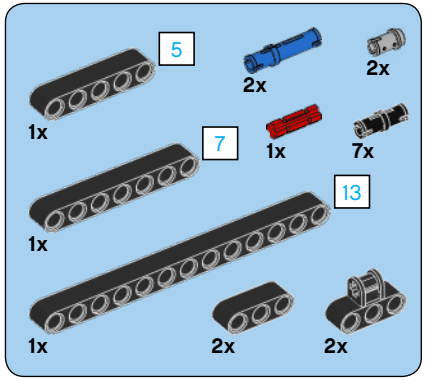

58

1

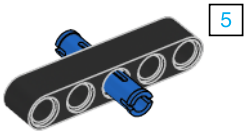

2

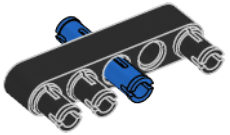

3

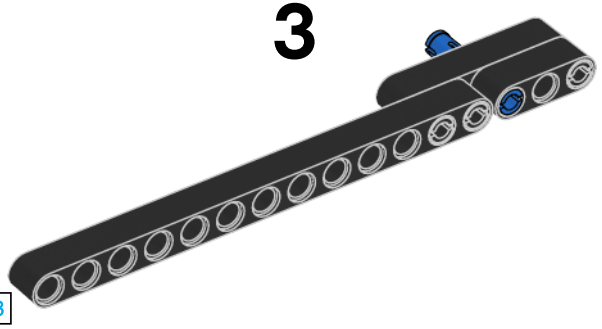

4

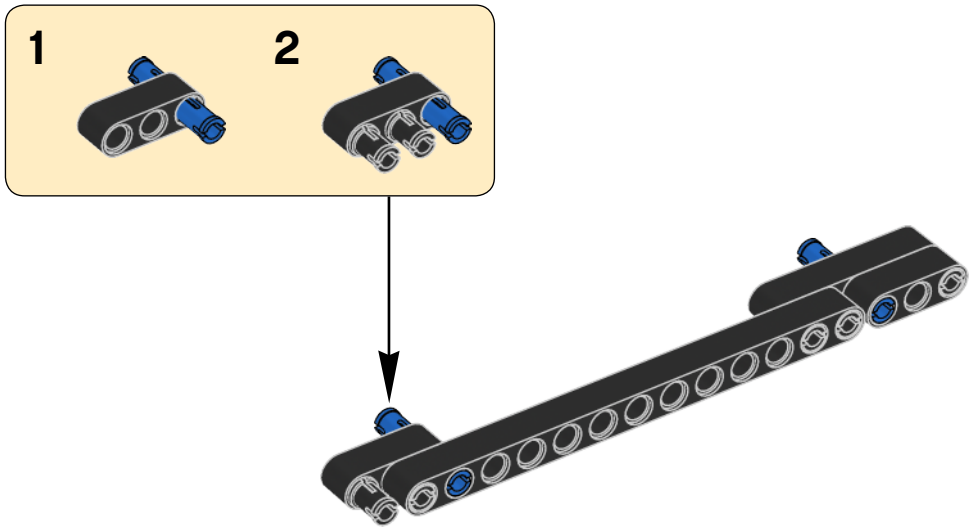

5

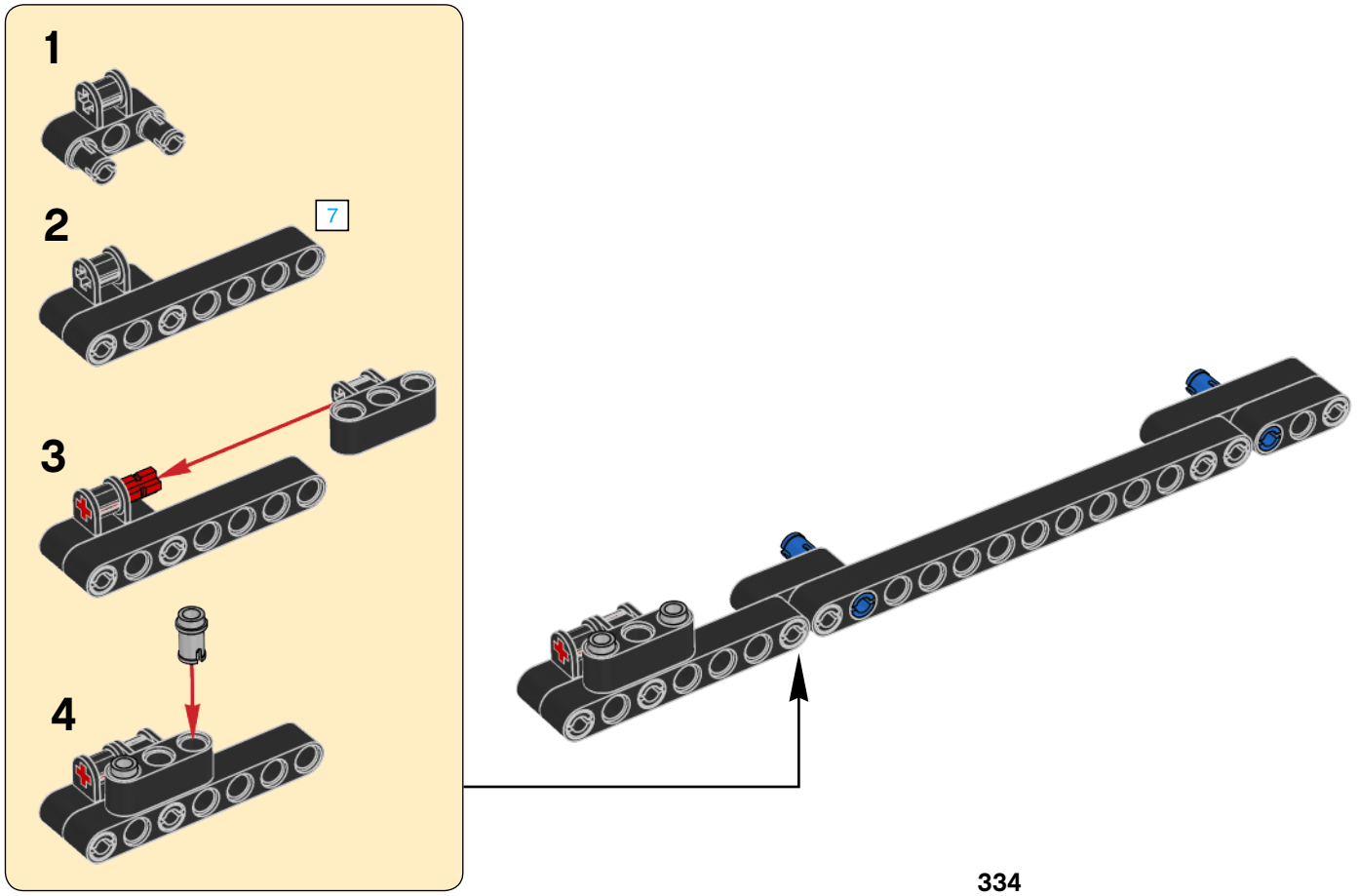

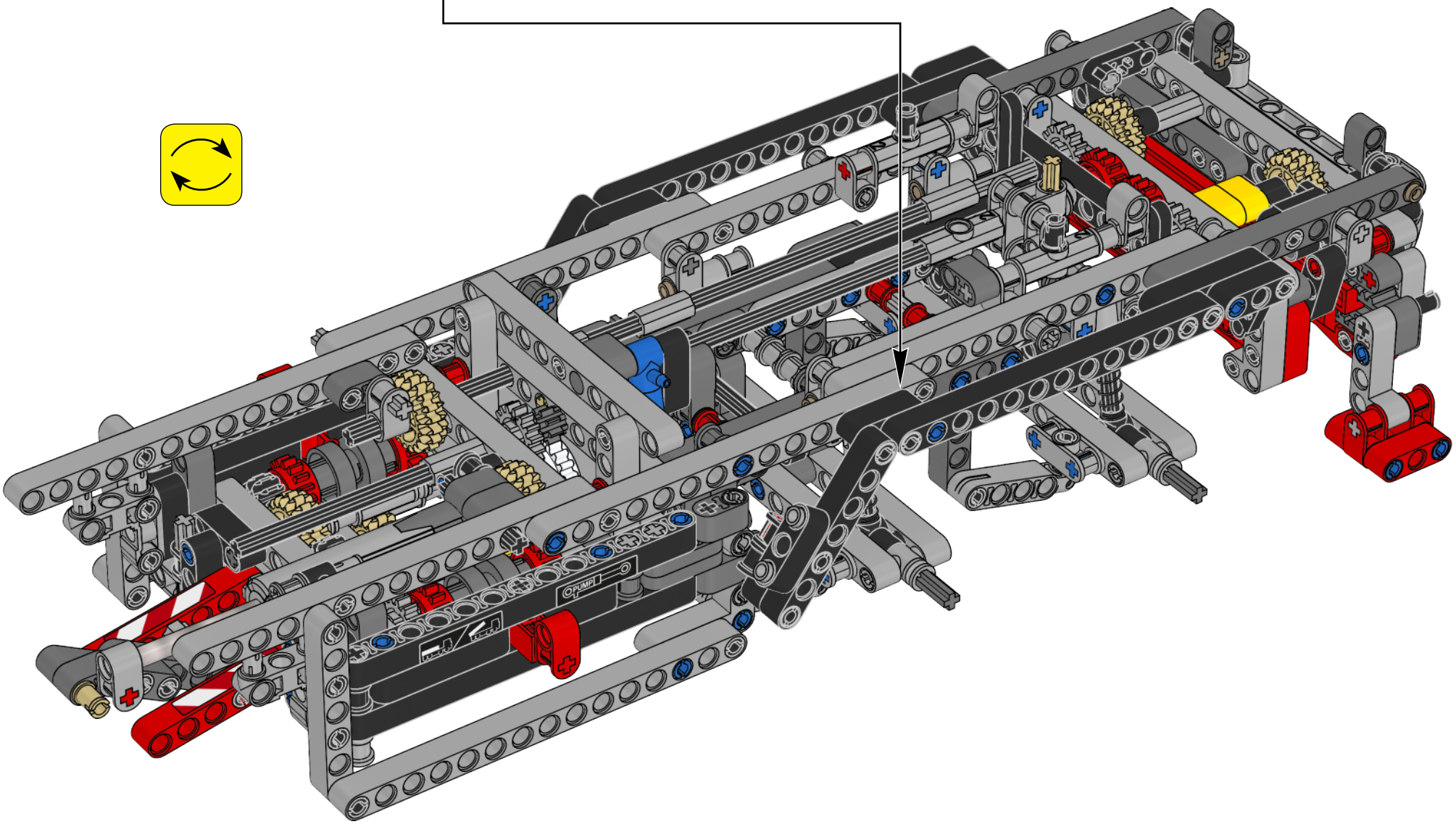
PUMP

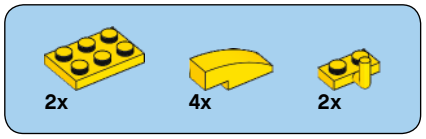

59

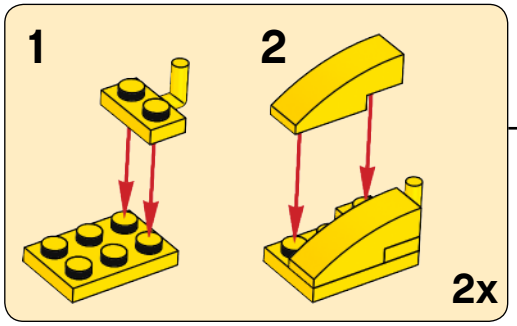

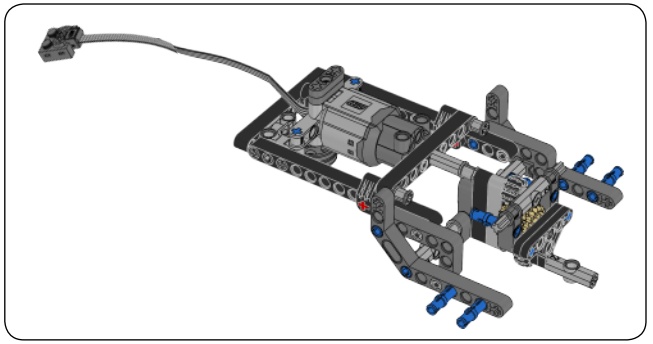

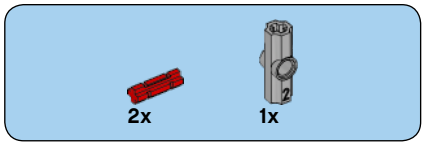

1

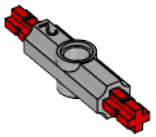

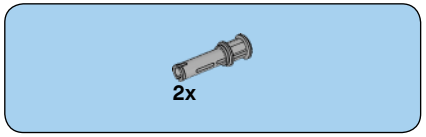

2

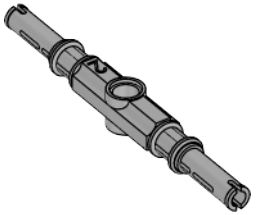

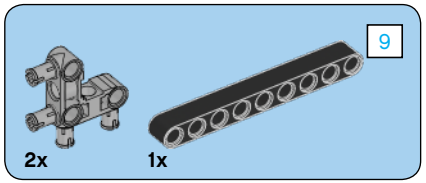

3

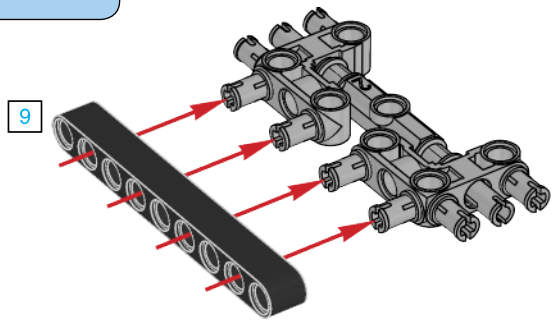

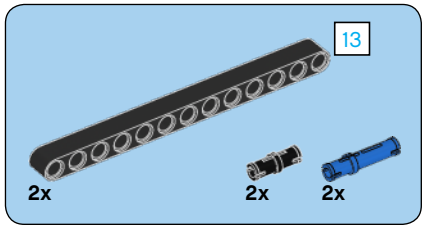

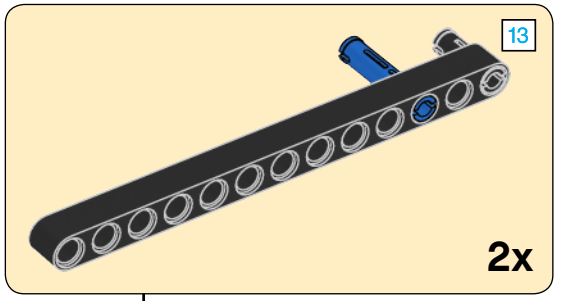

4

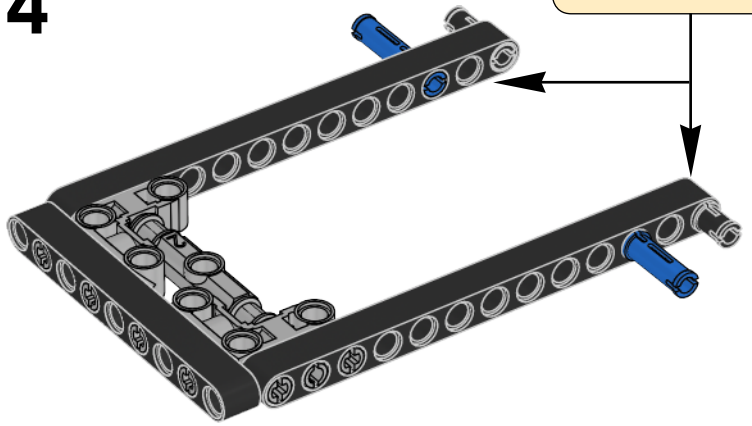

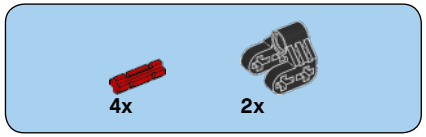

5

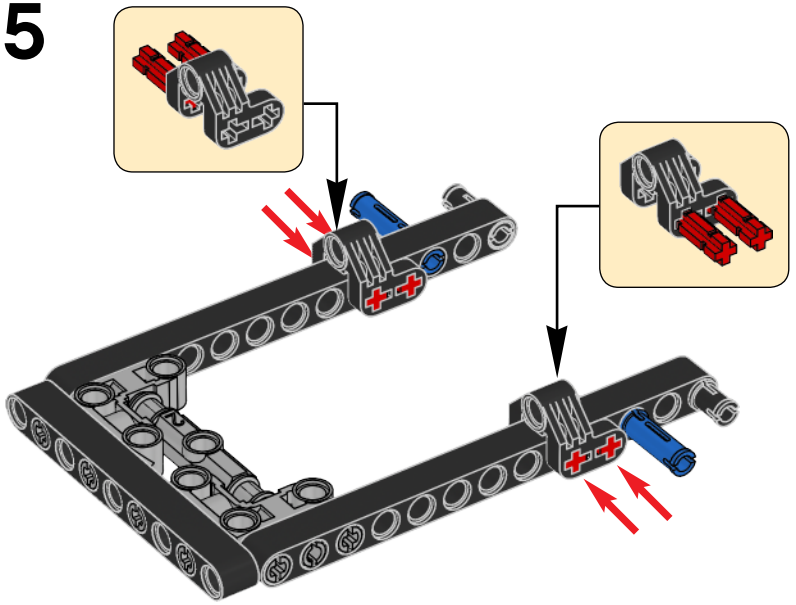

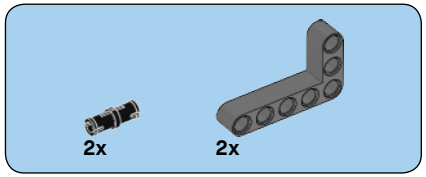

6

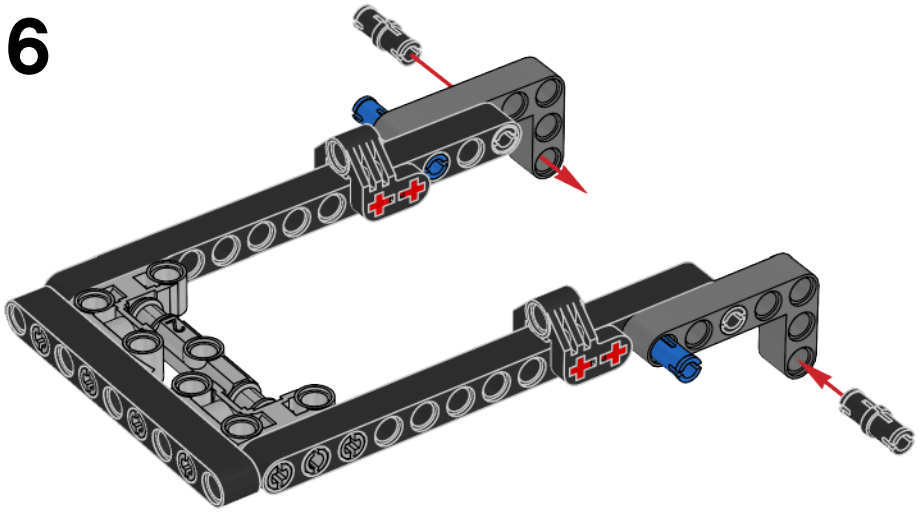

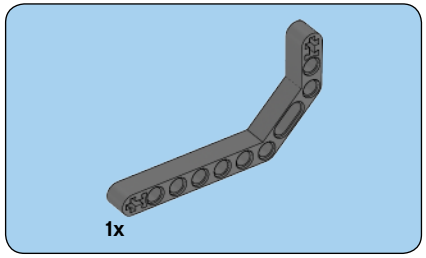

7

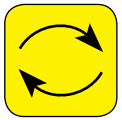

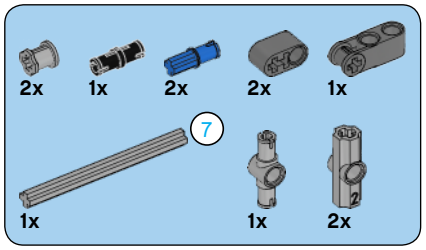

8

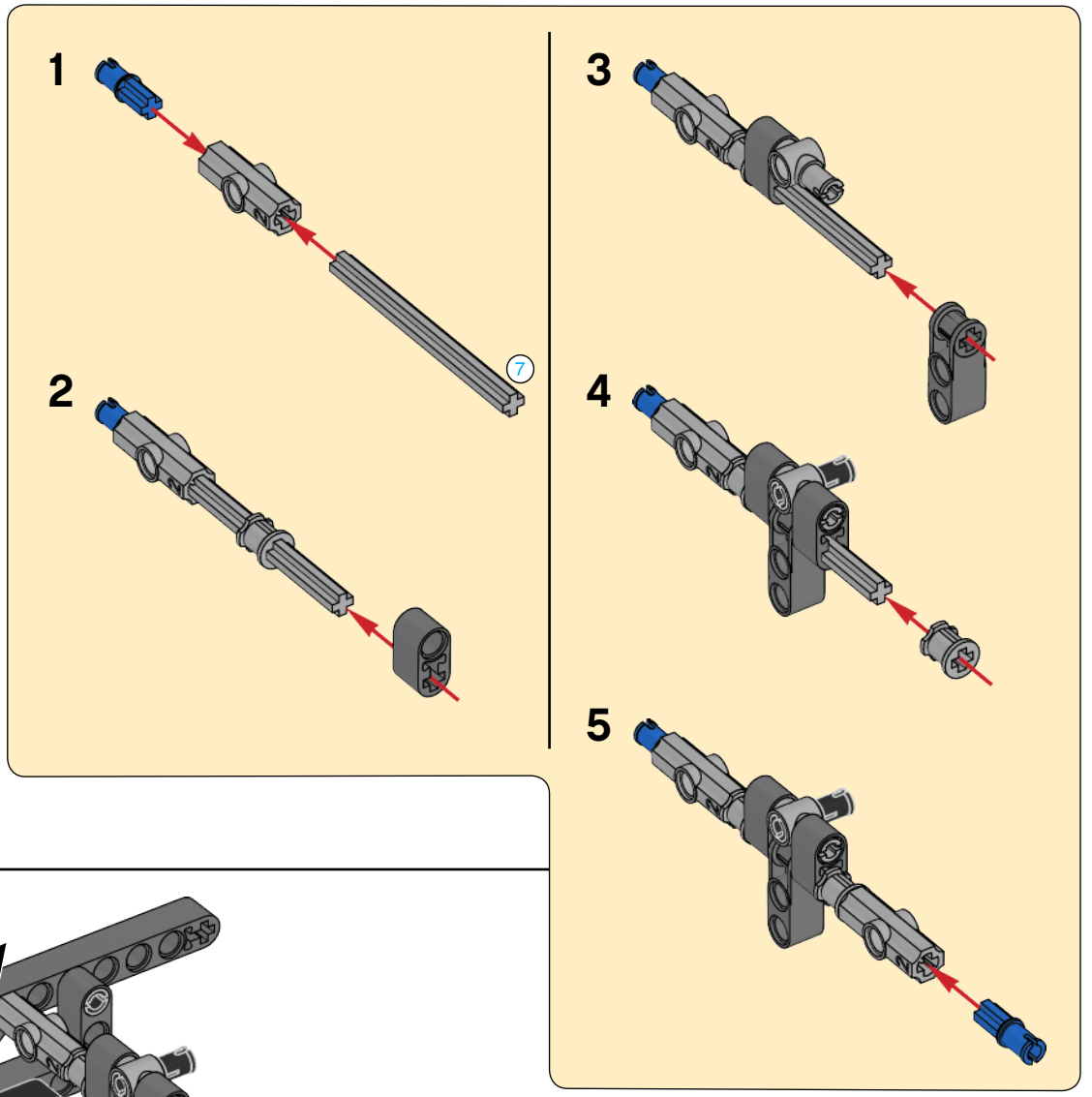

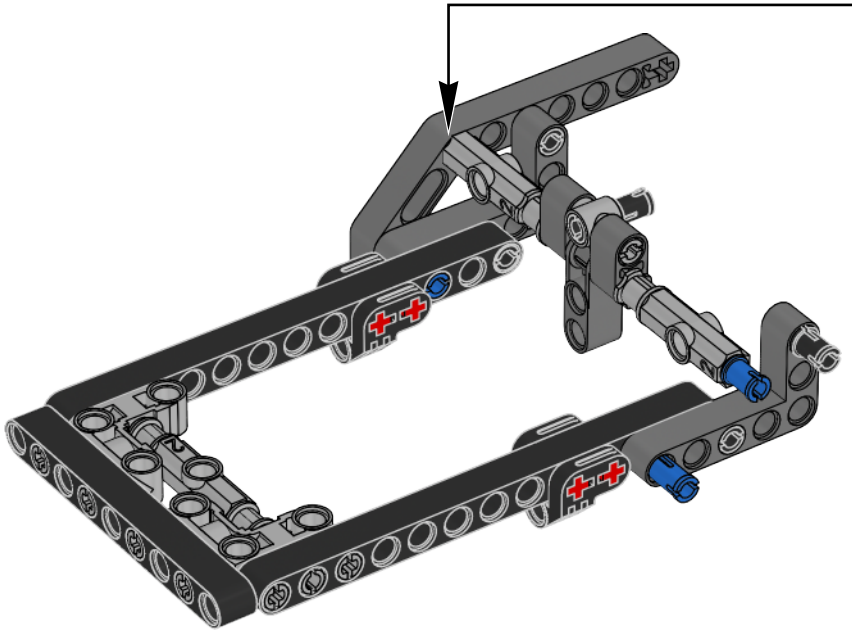

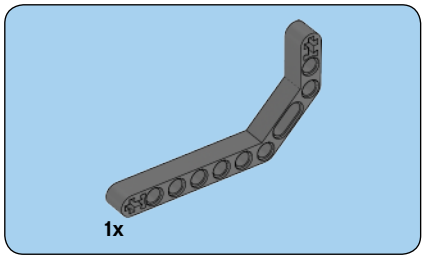

9

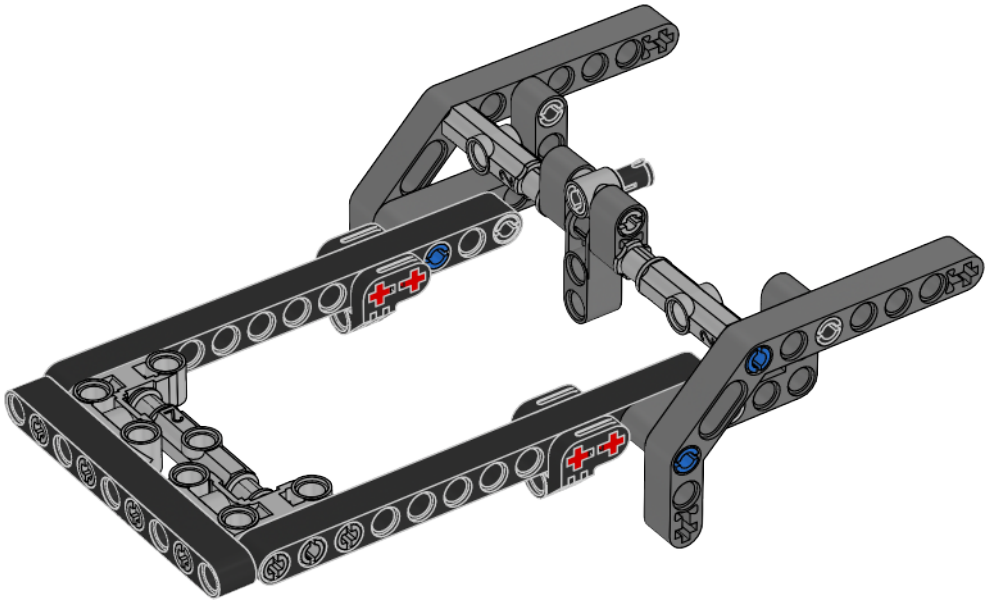

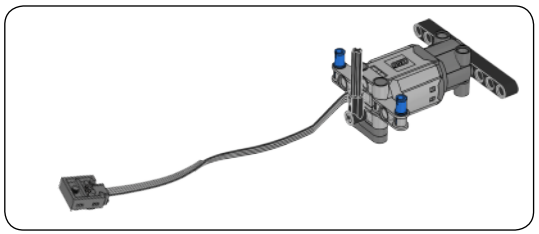

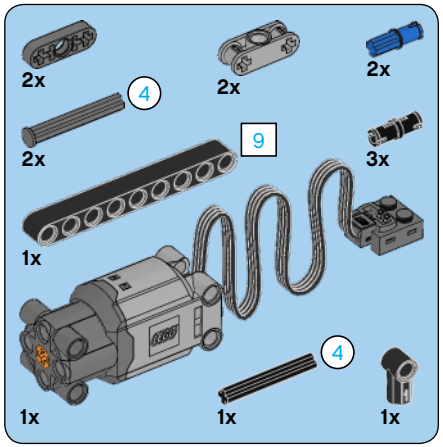

10

1

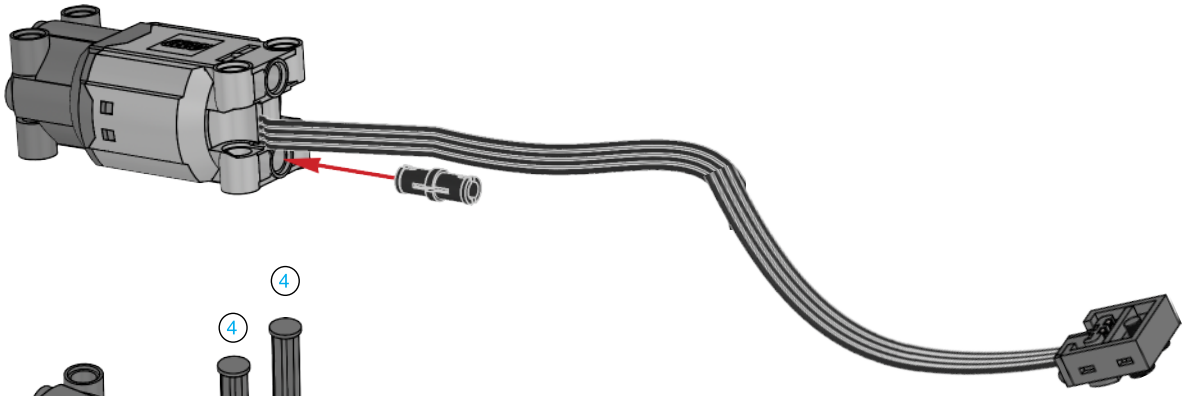

2

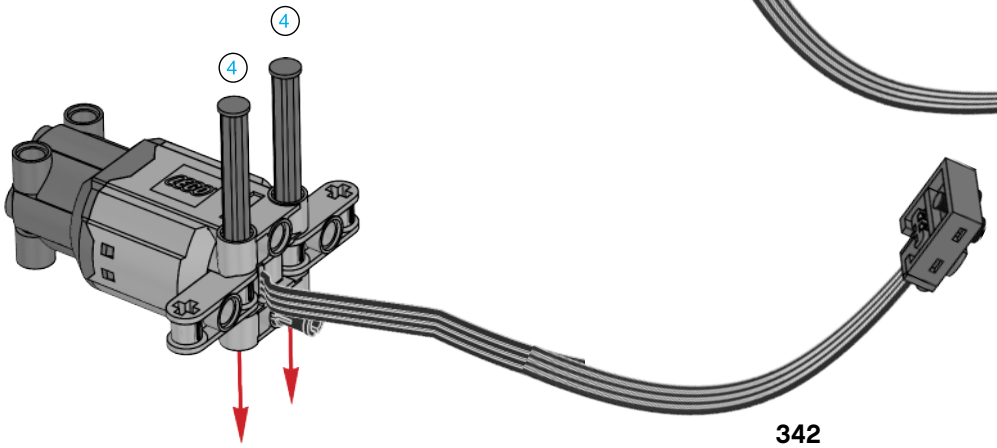

3

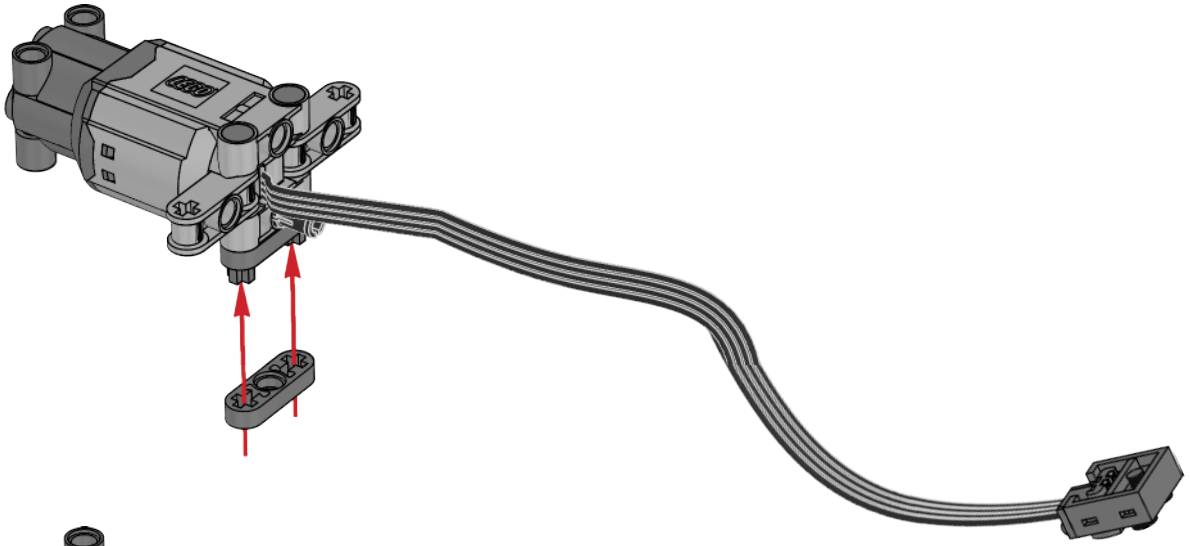

4

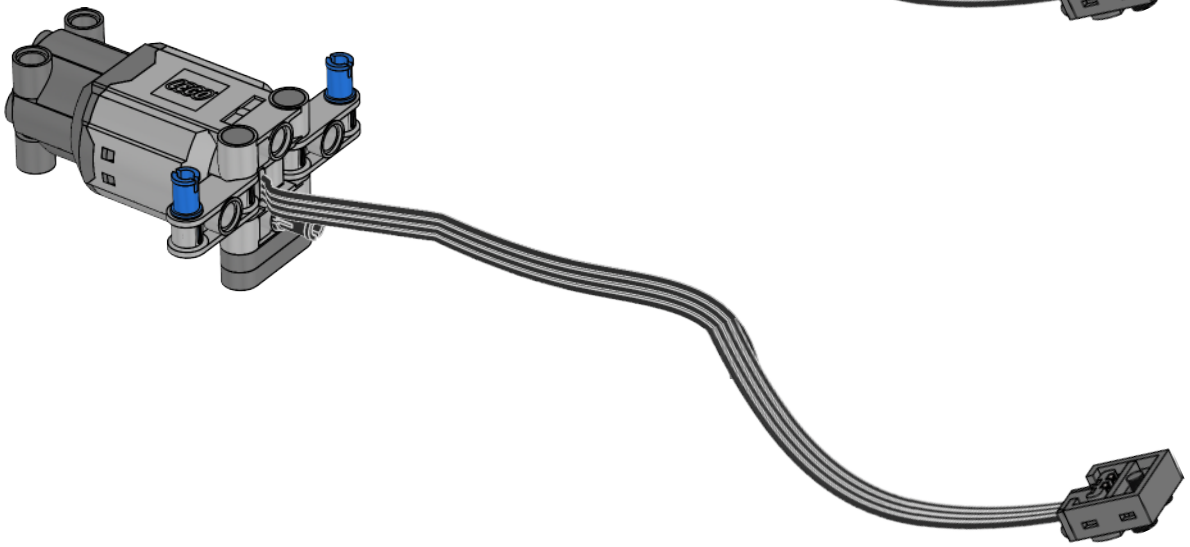

5

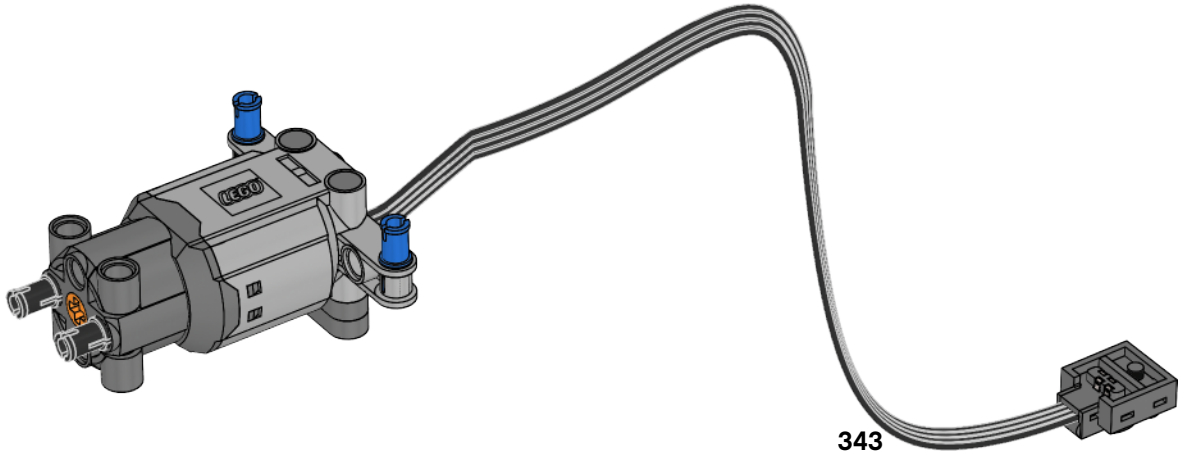

6

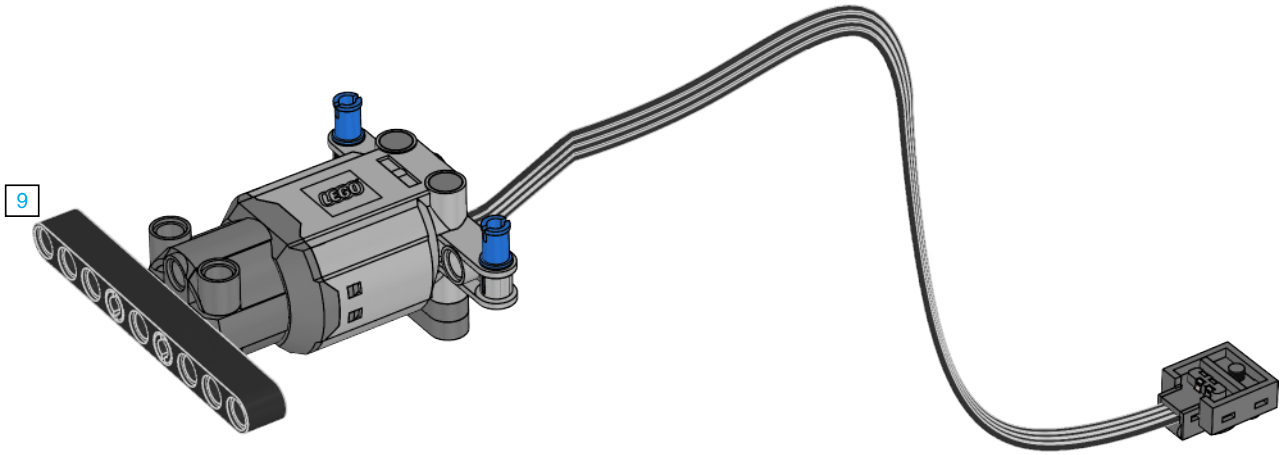

7

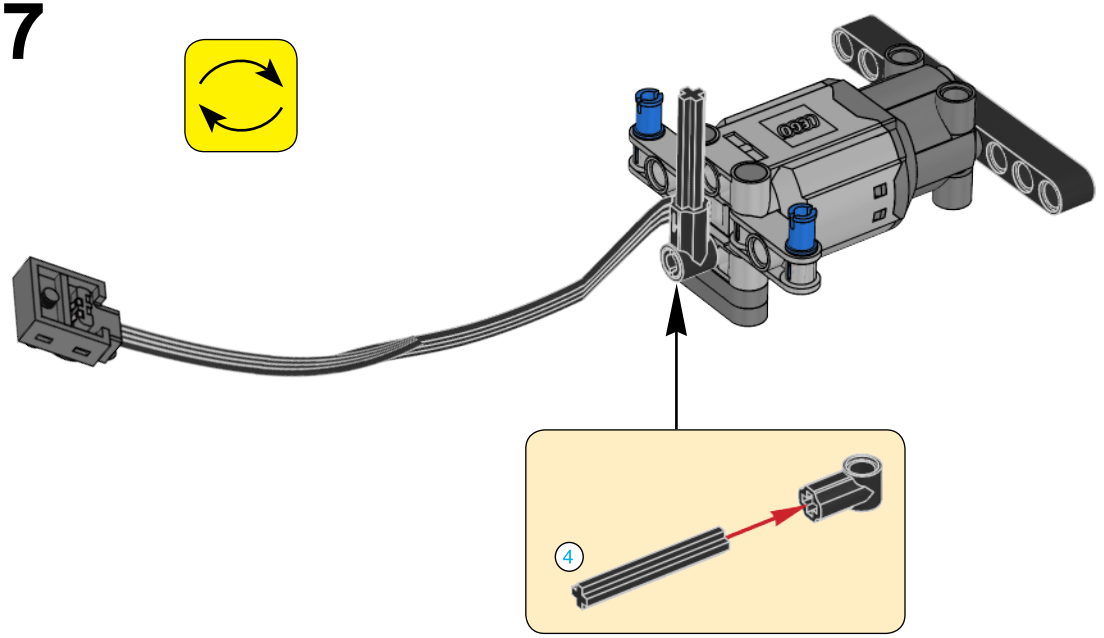

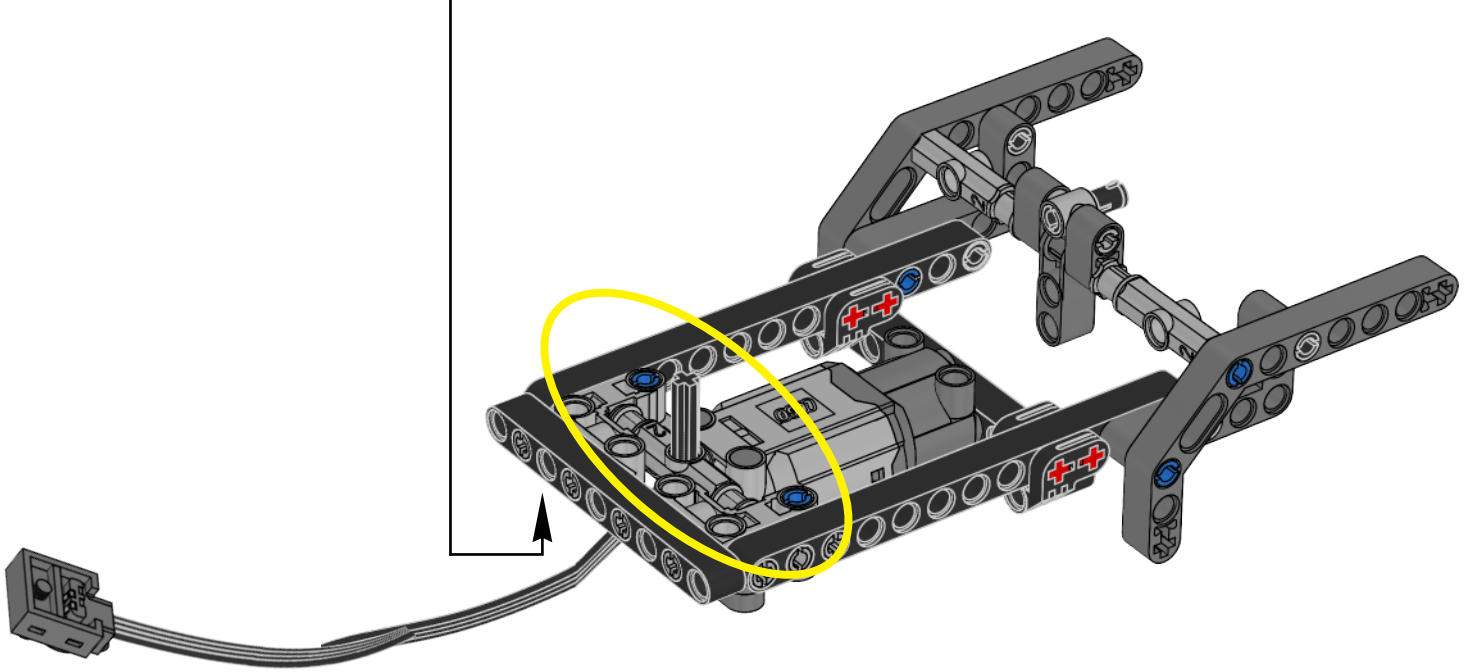



11

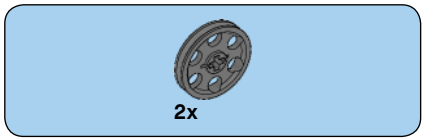

12

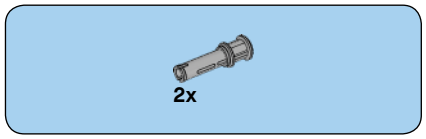

13

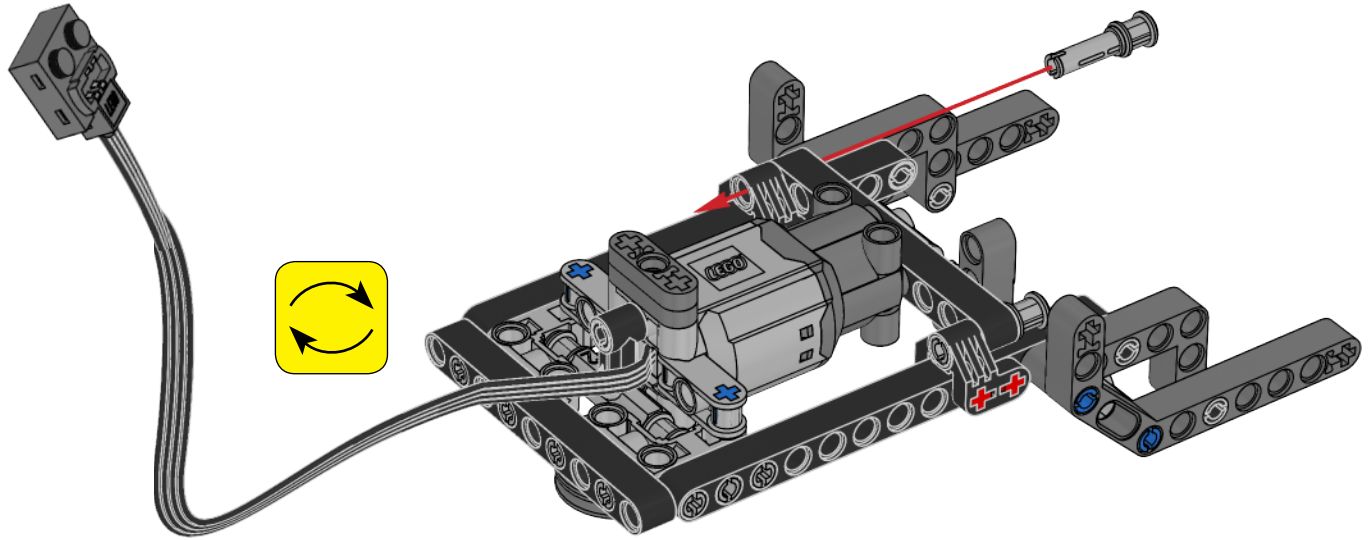

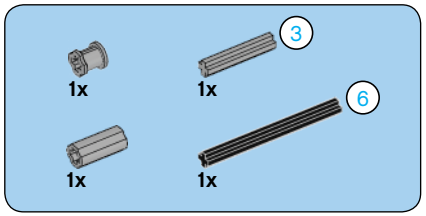

14

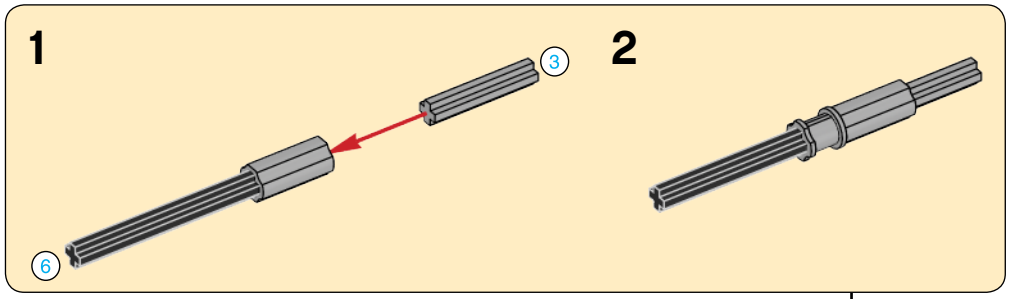

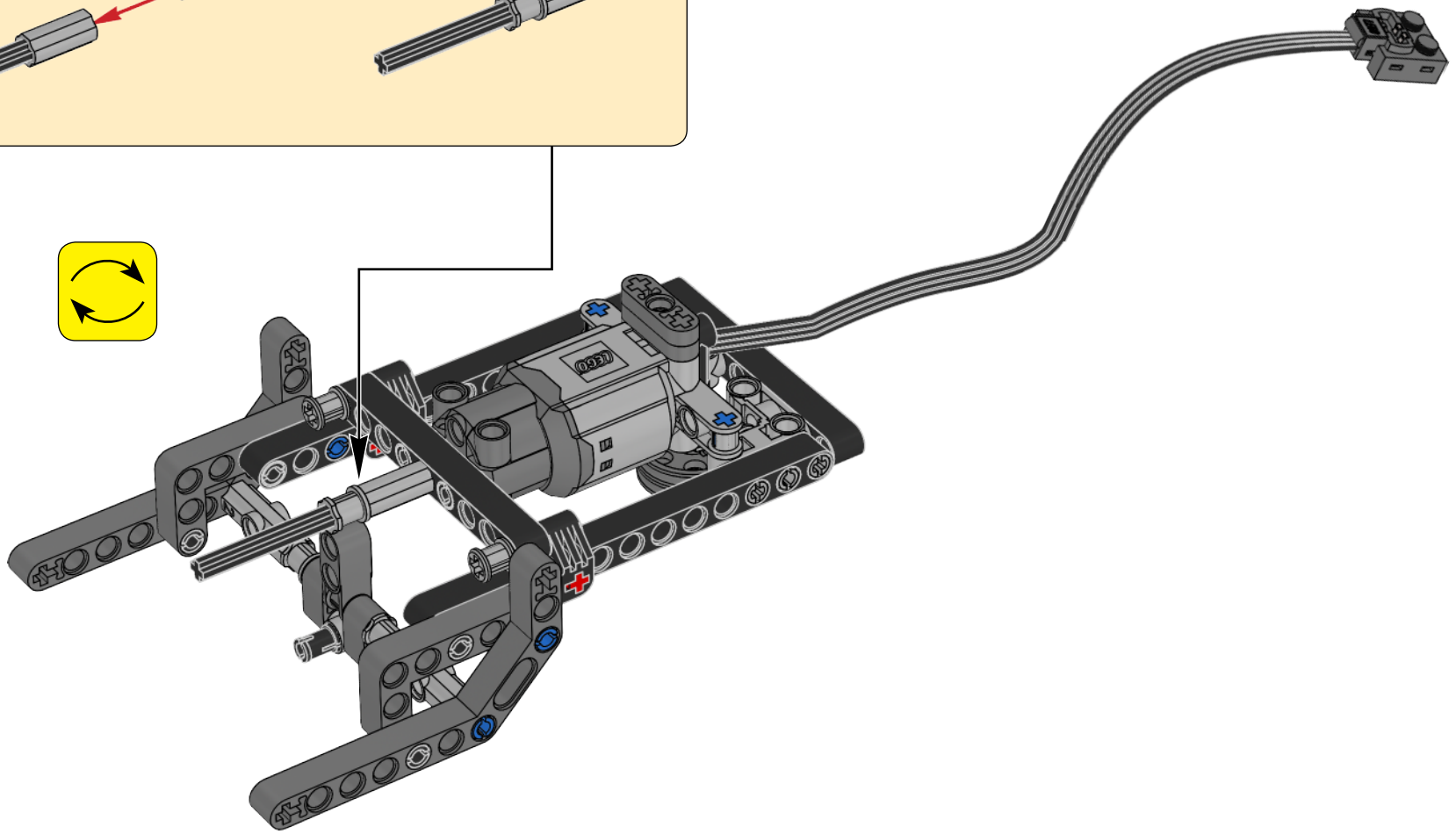

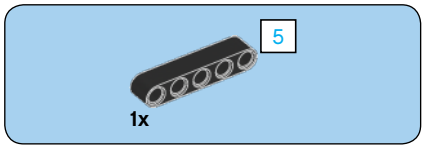

15

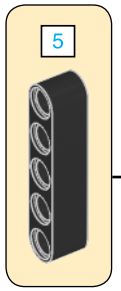

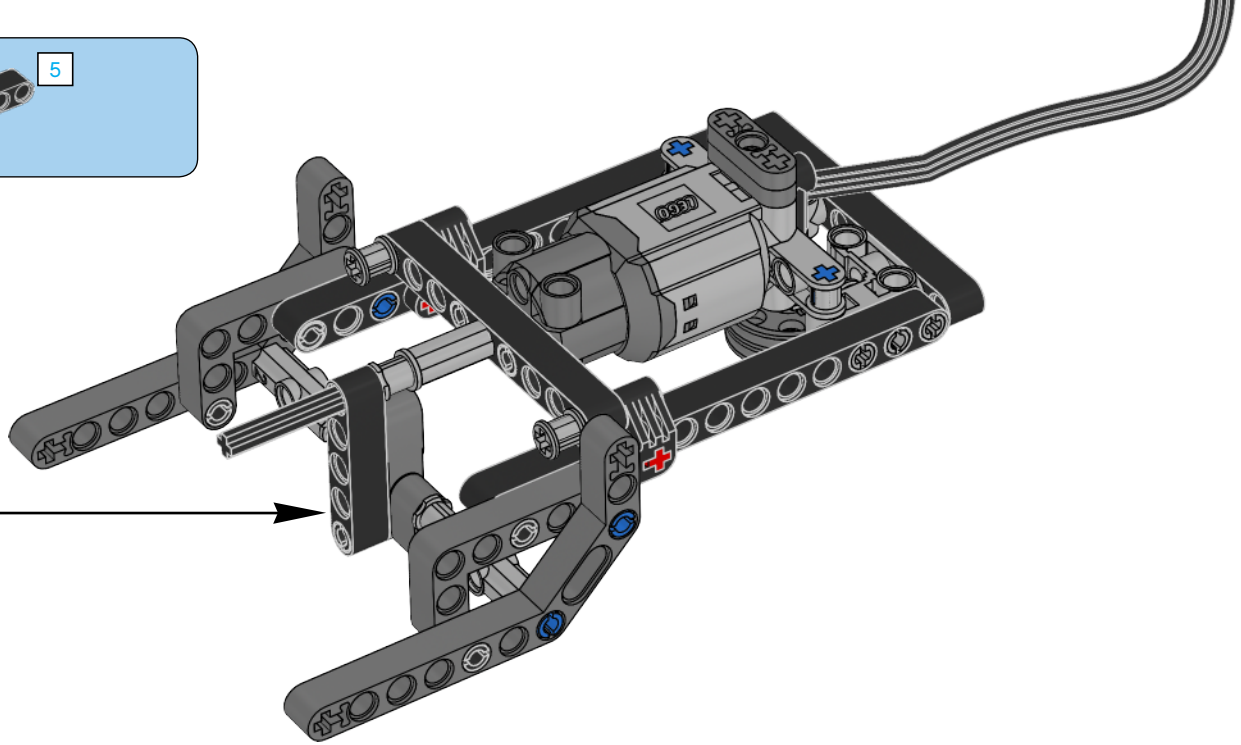

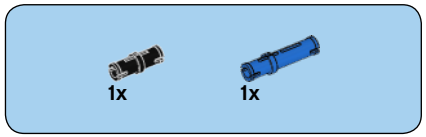

16

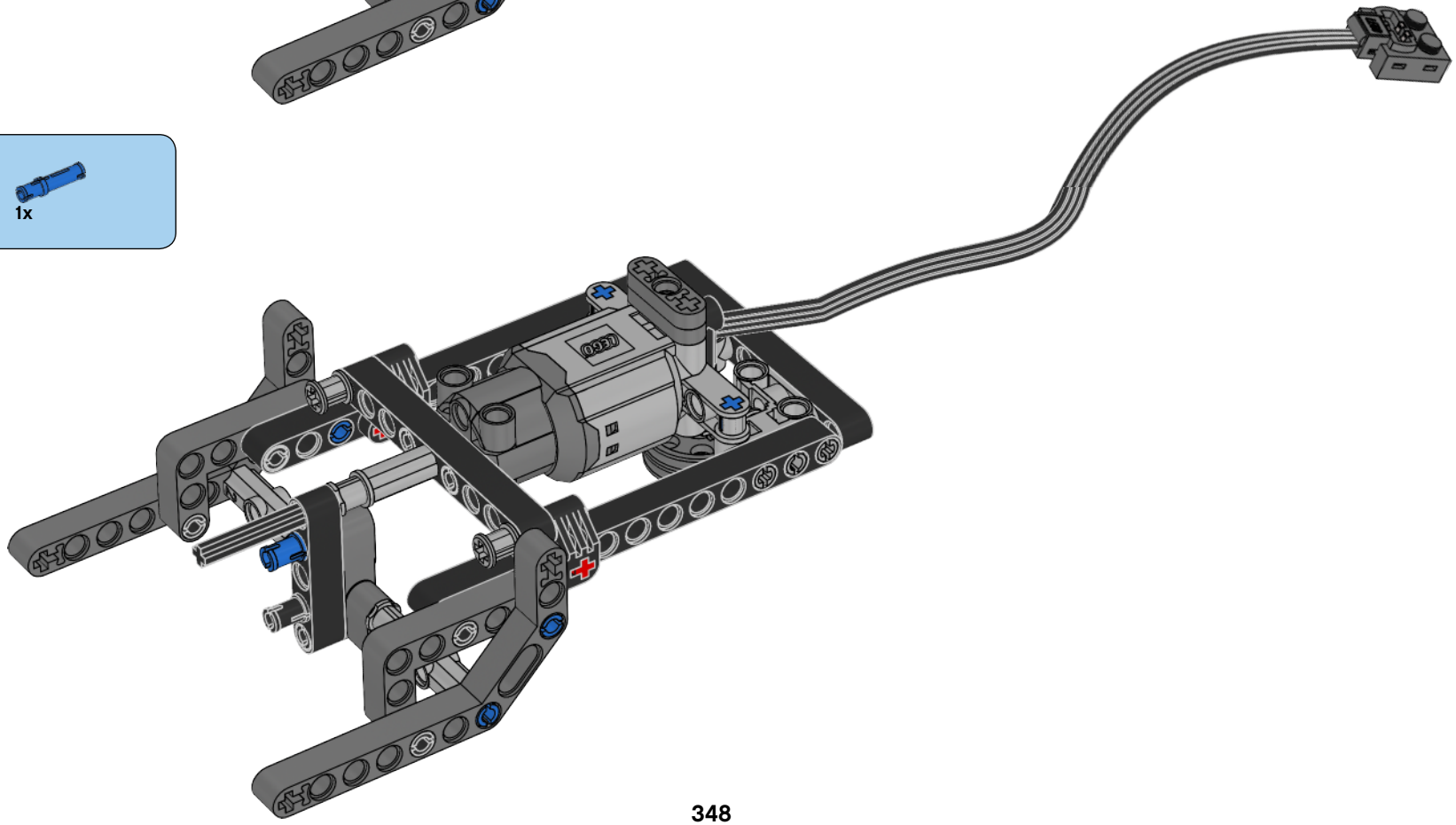

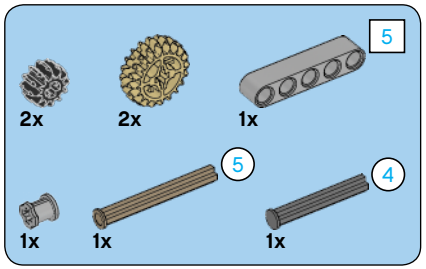

17

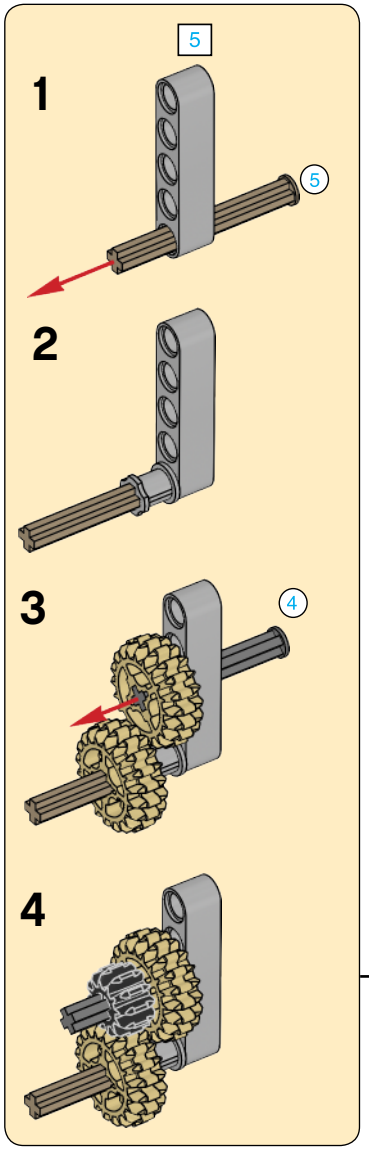

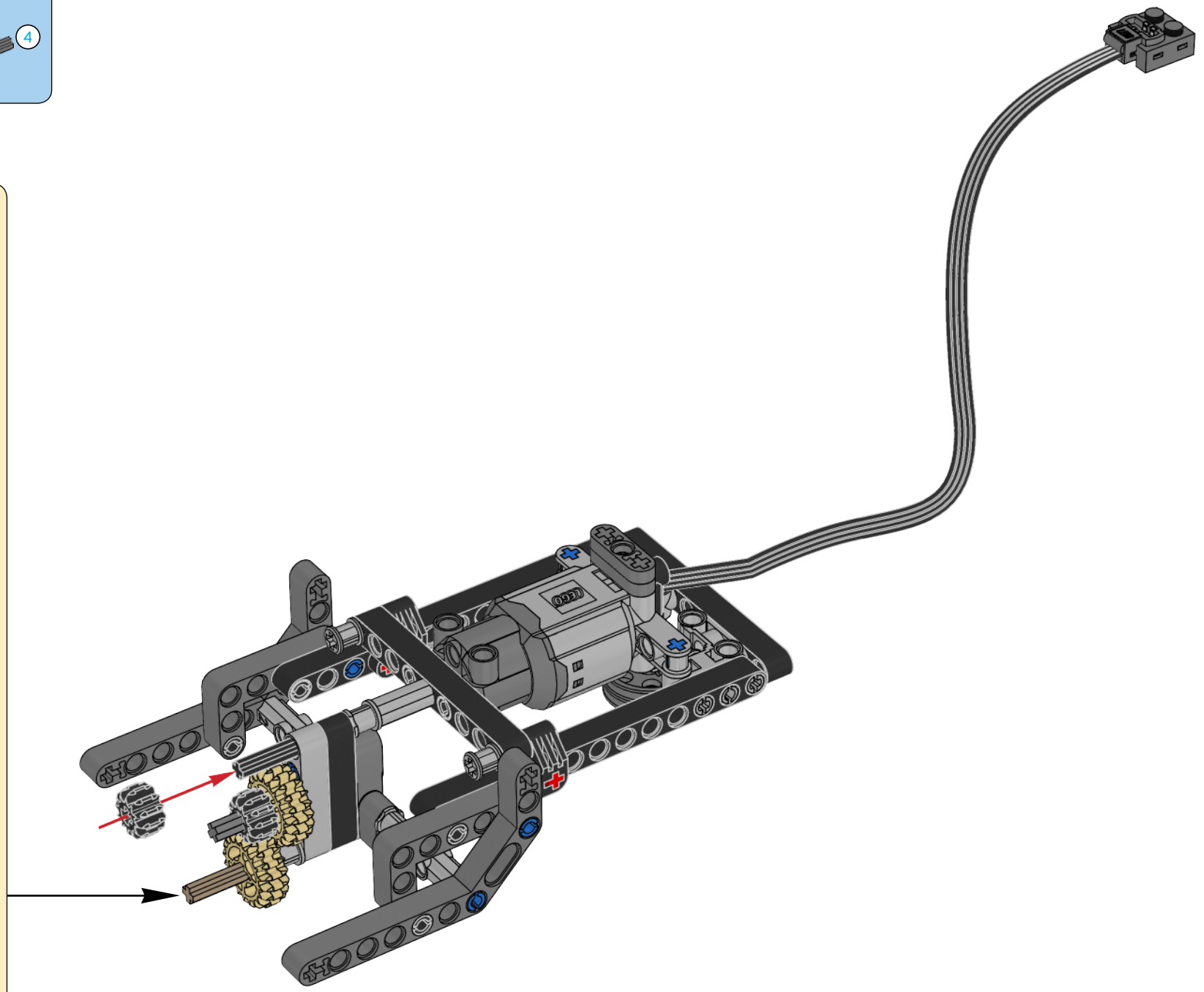

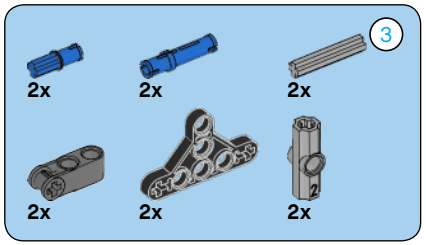

18

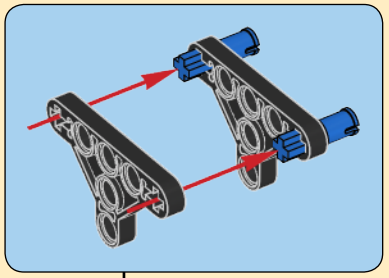

4x

19

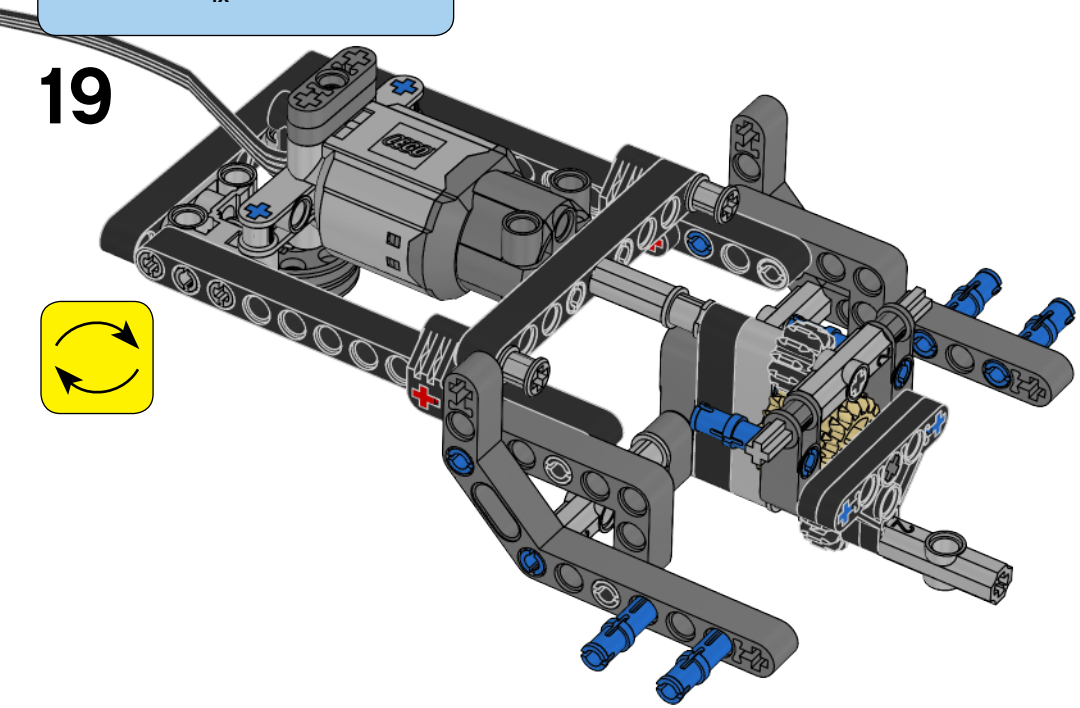

60

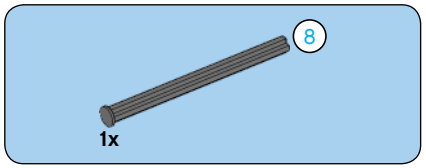

61

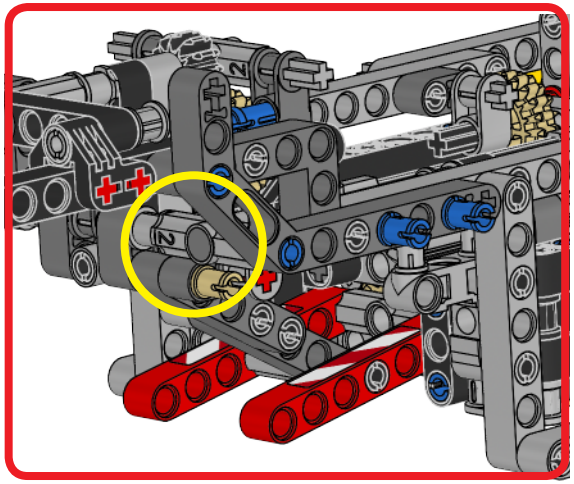

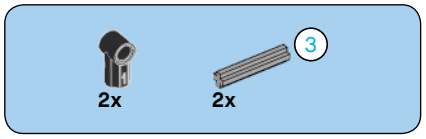

62

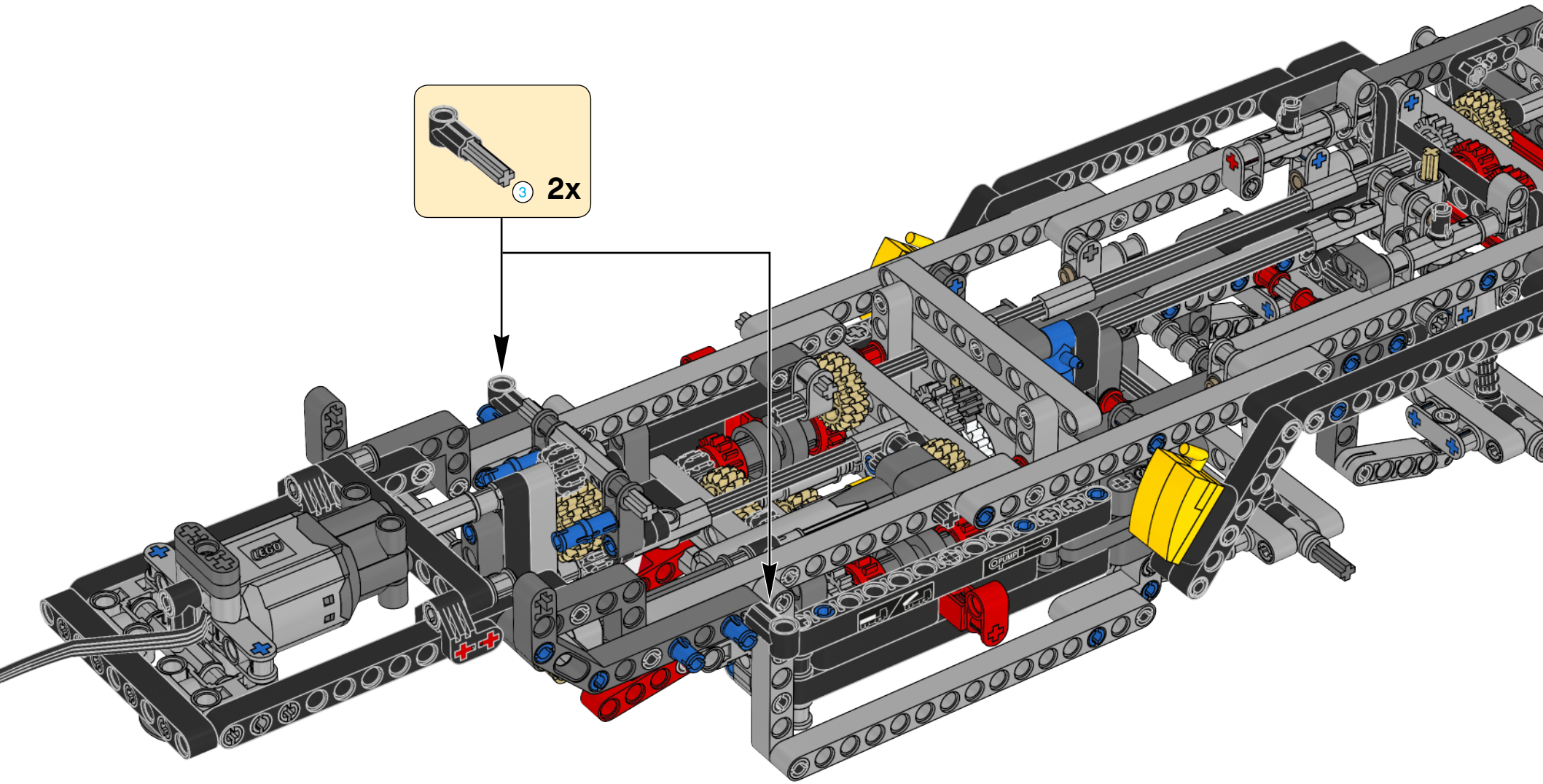

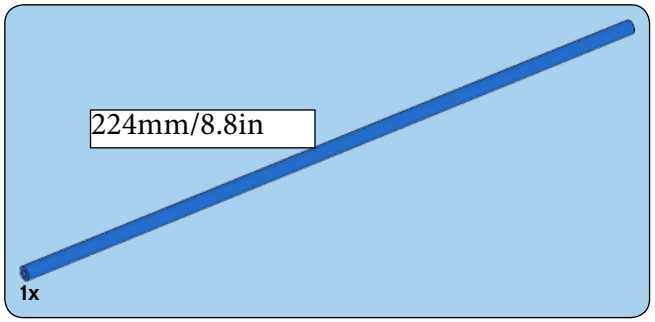

63

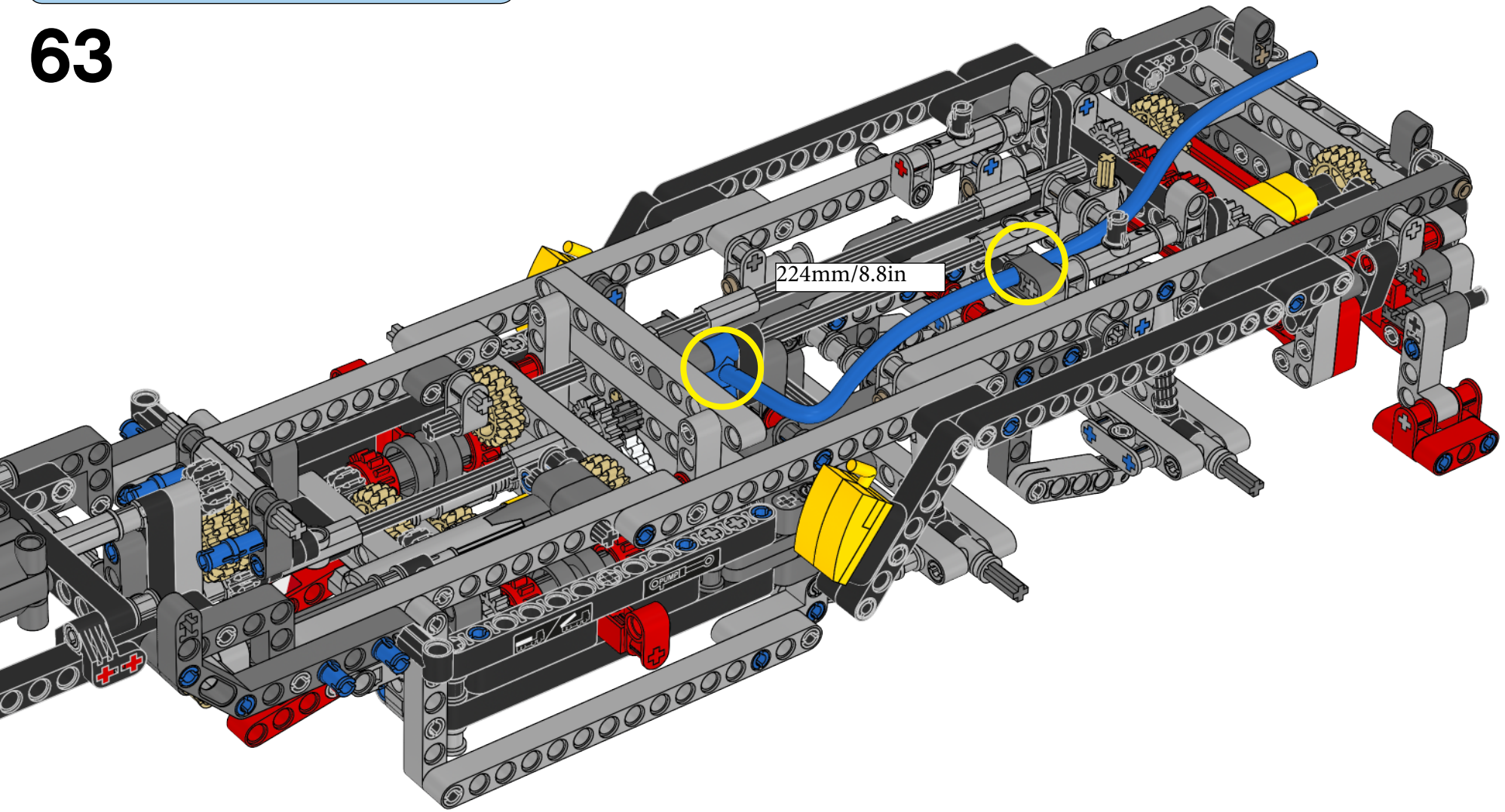

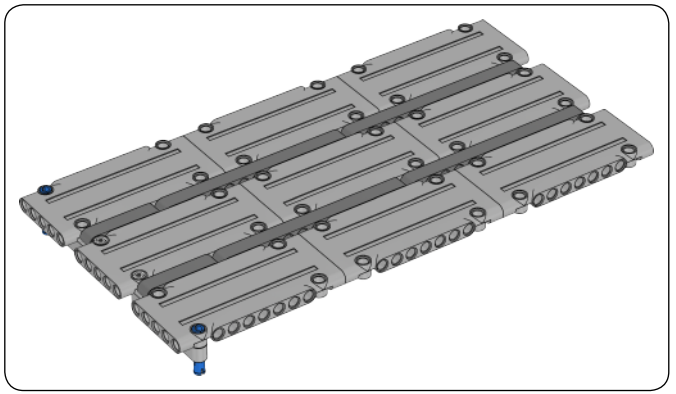

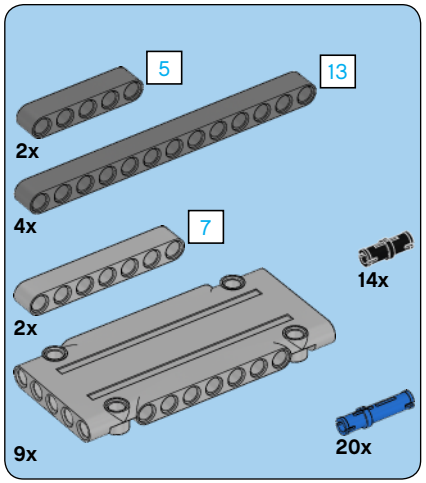

64

1

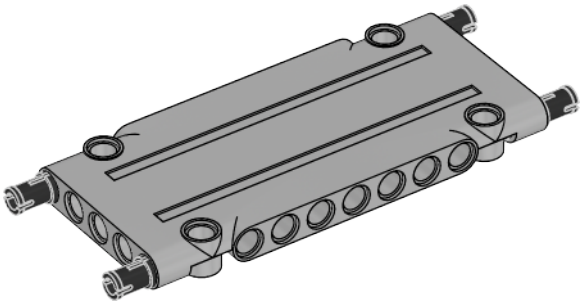

2

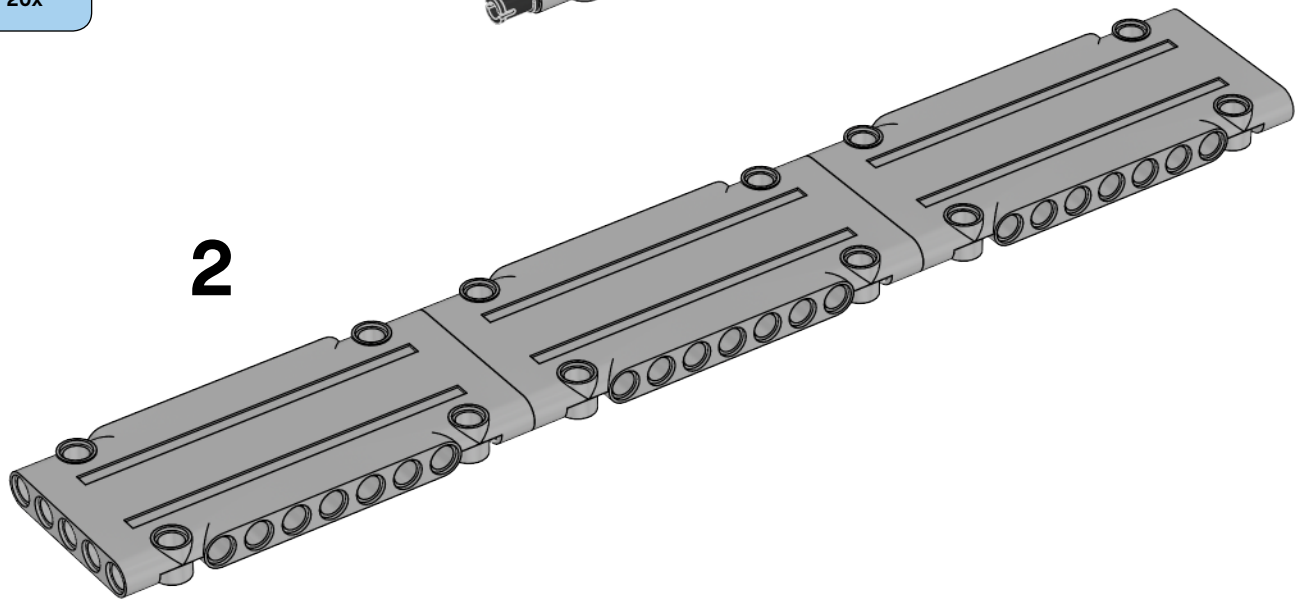

3

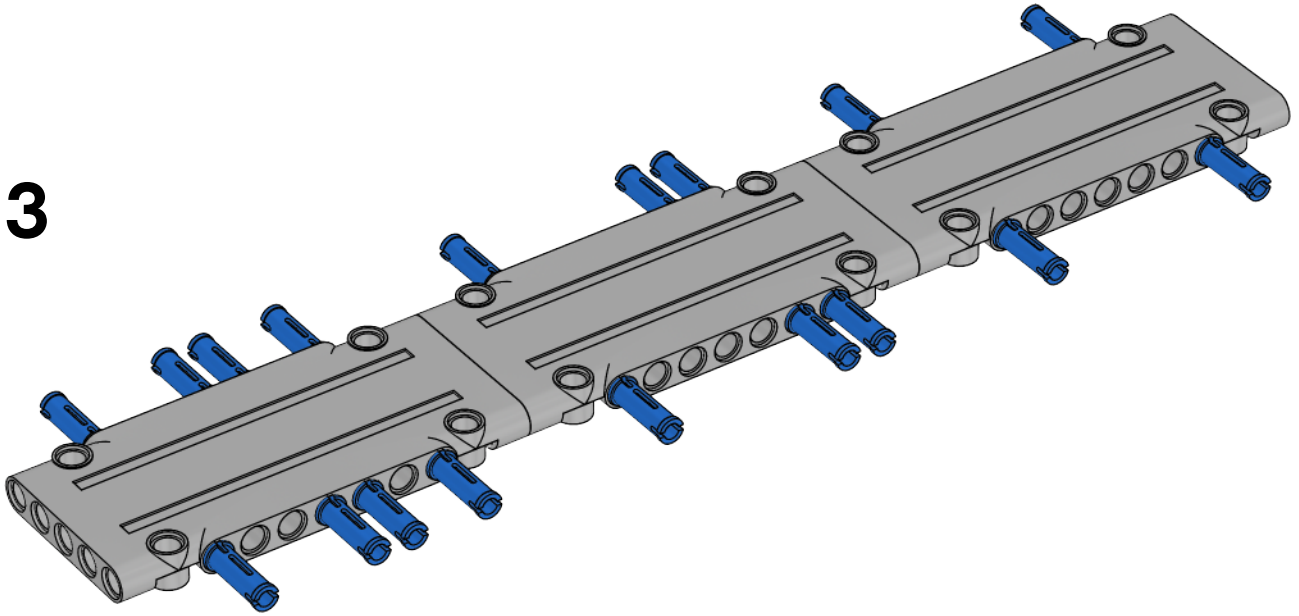

4

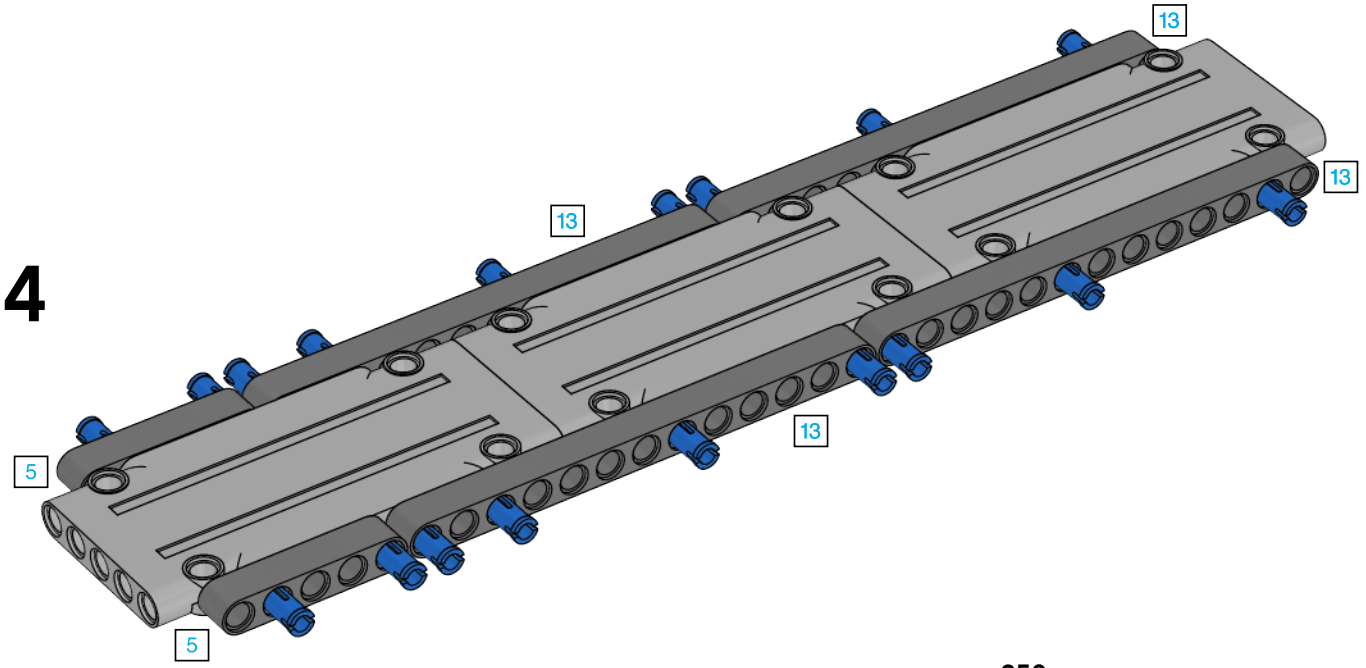

5

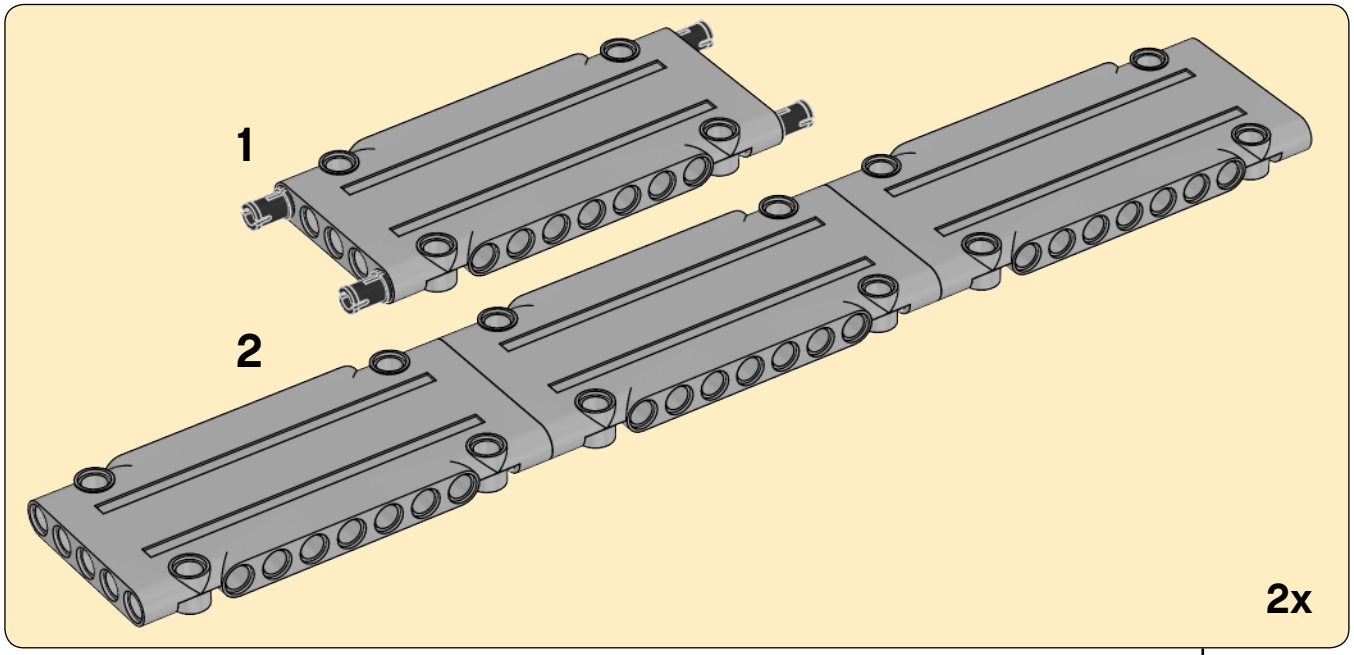

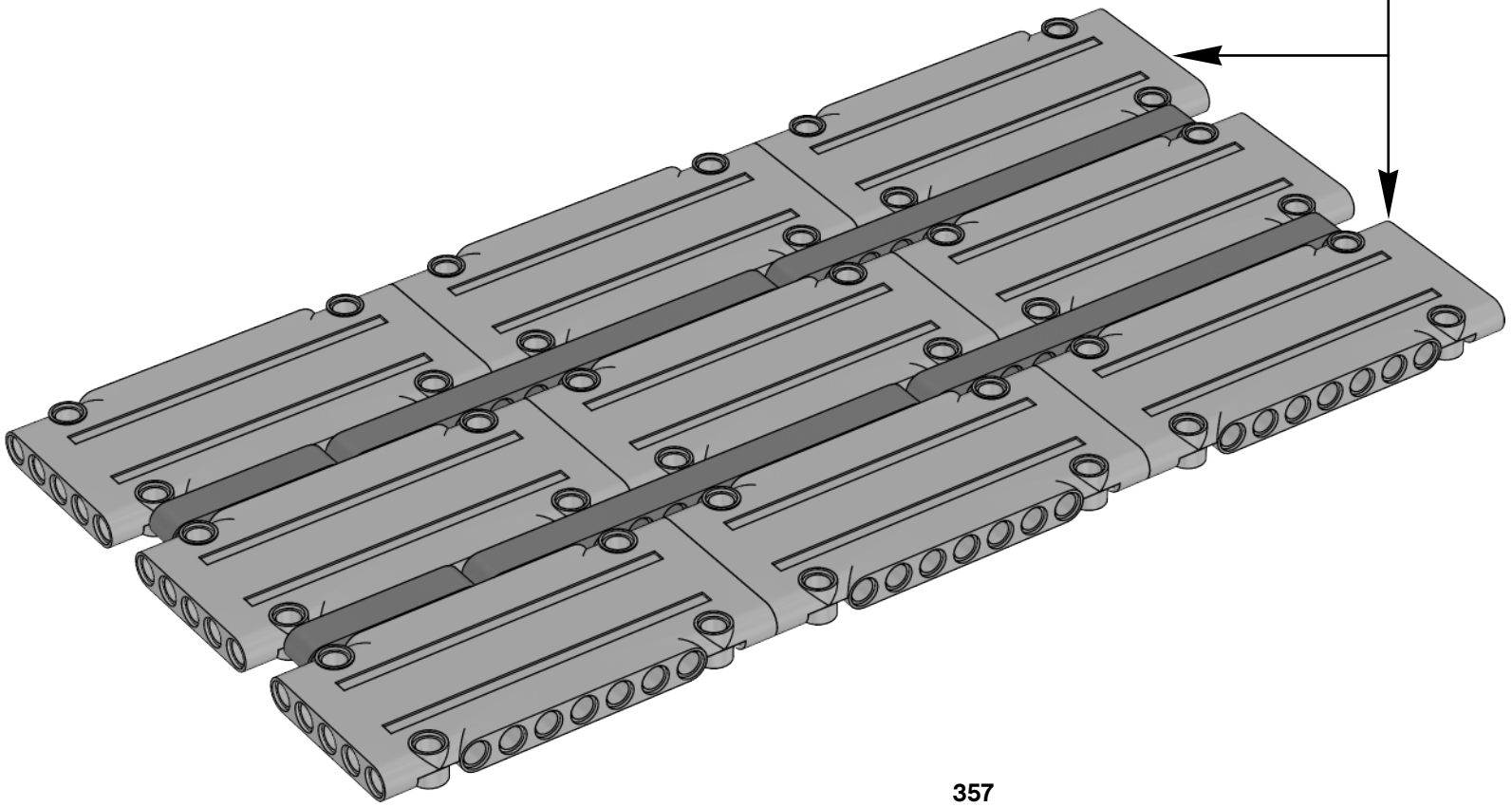

6

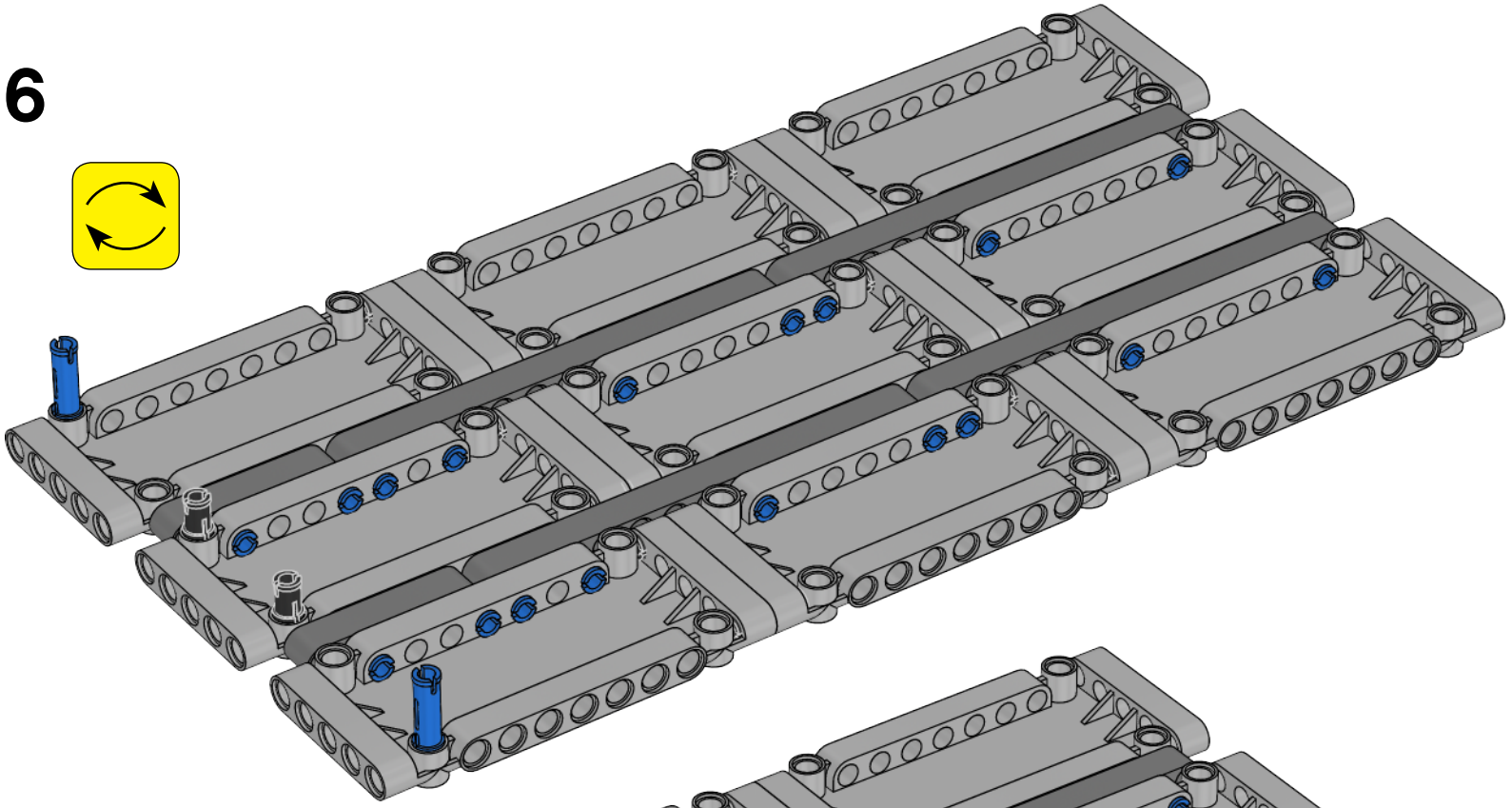

7

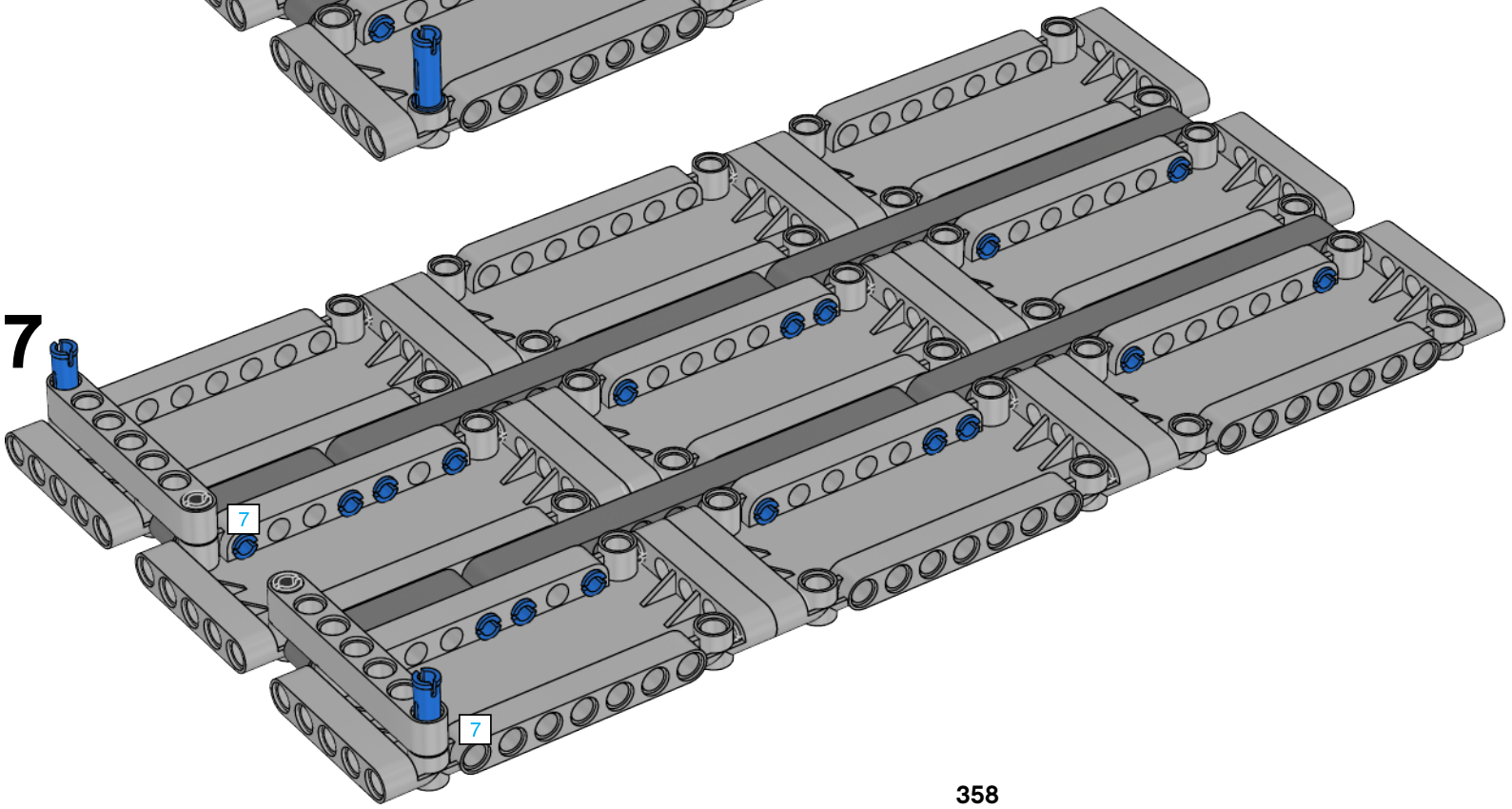

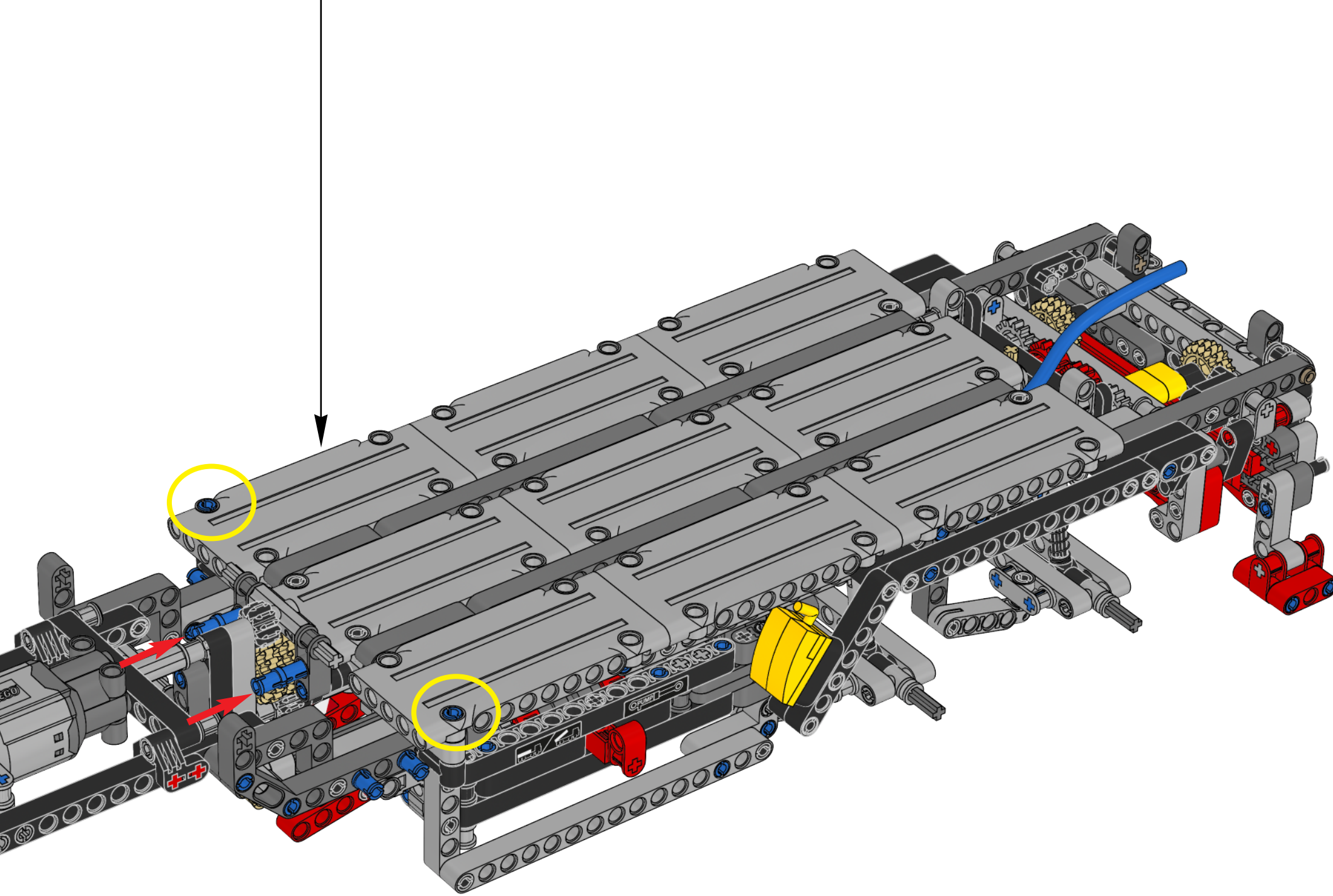

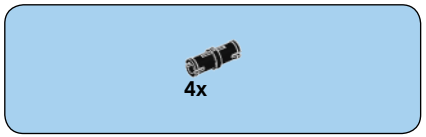

65

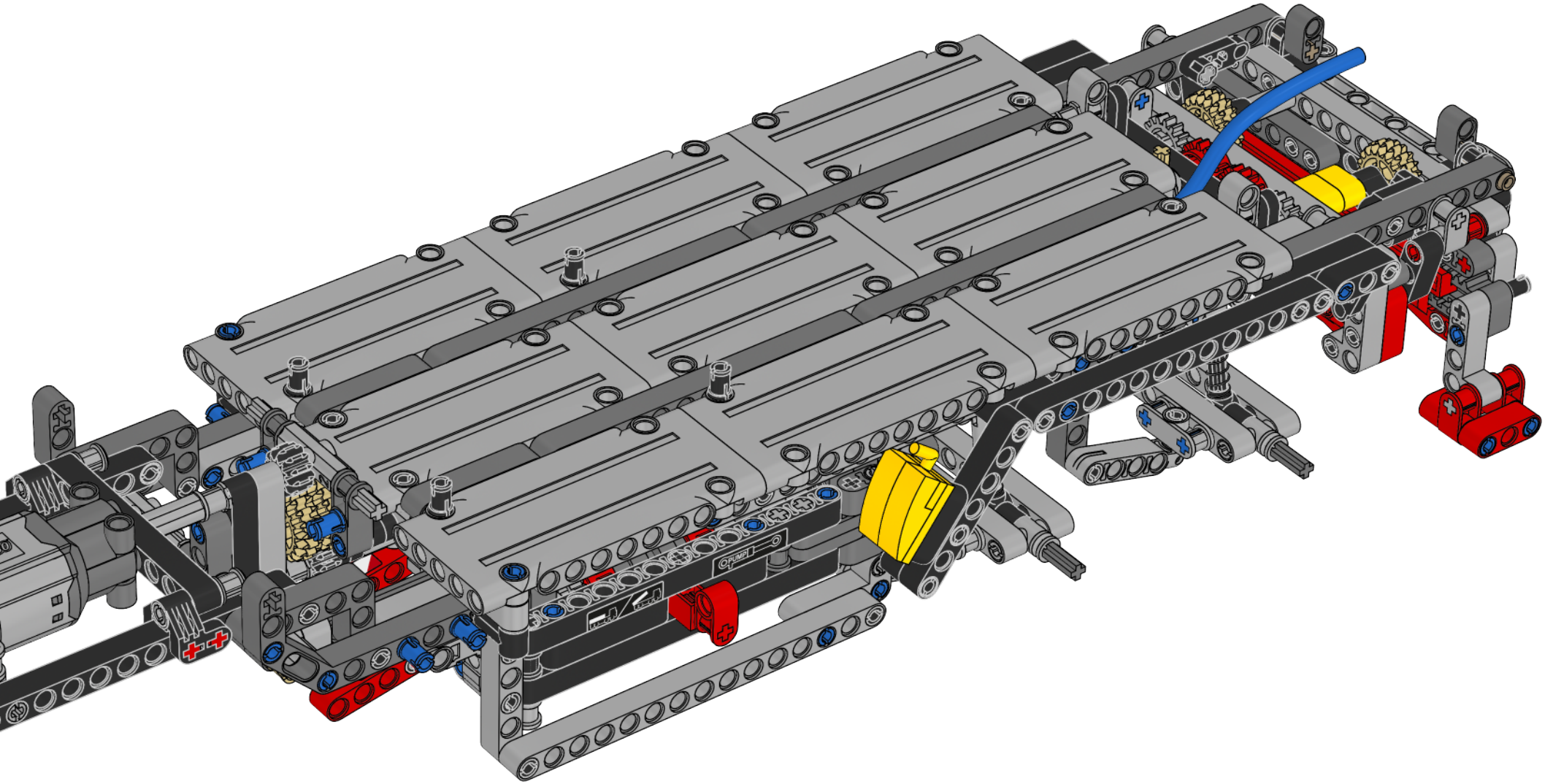

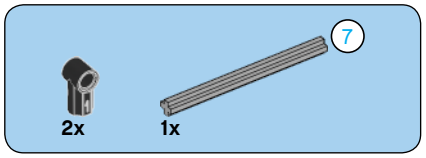

66

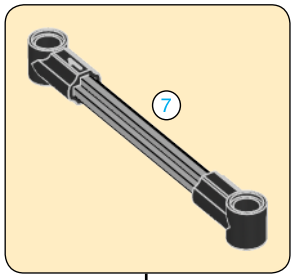

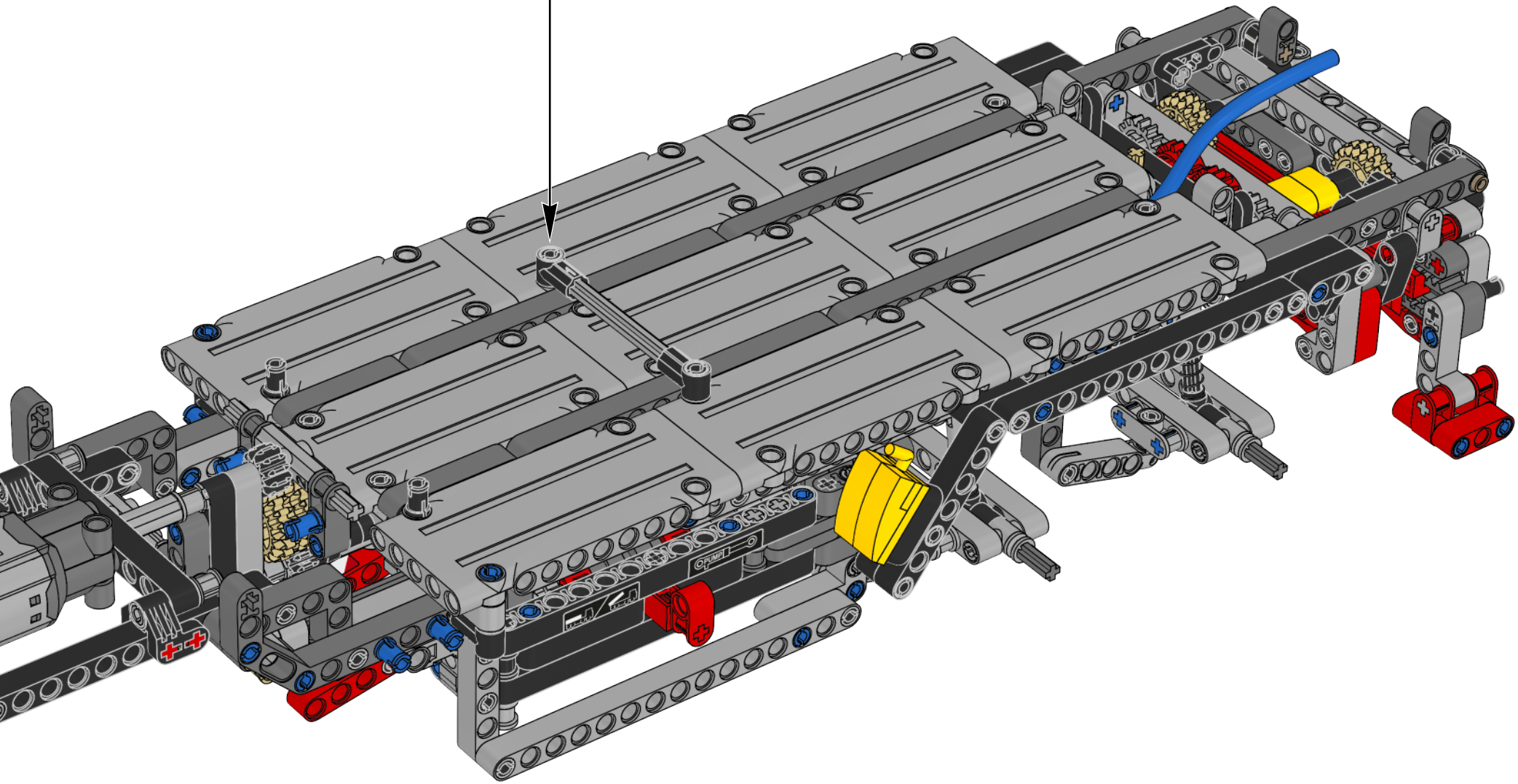

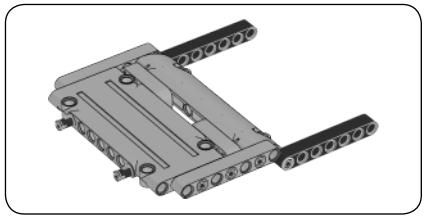

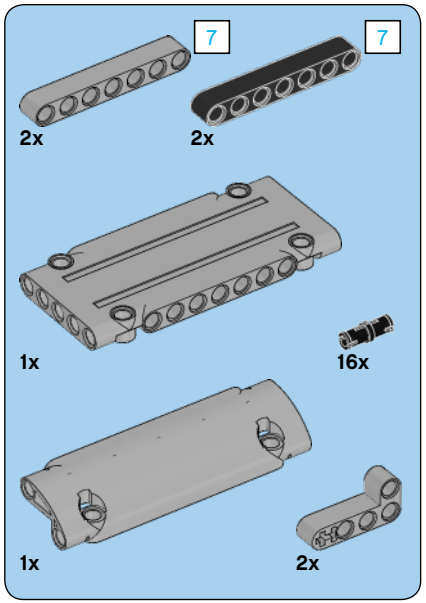

67

1

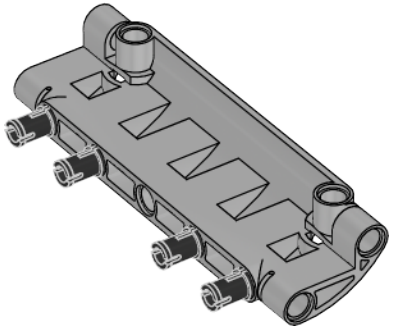

2

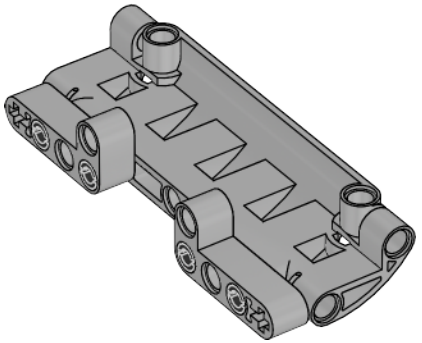

3

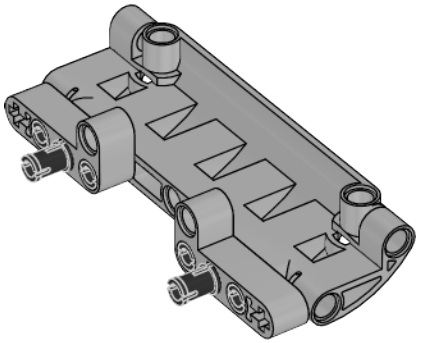

4

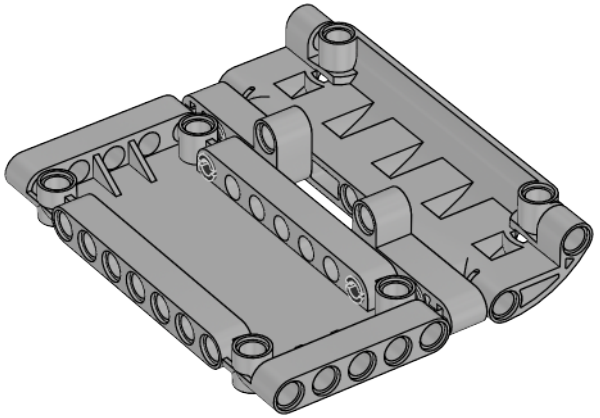

5

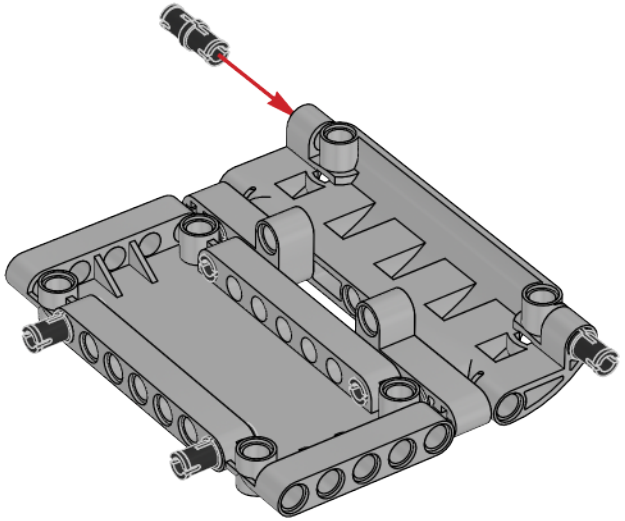

6

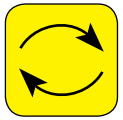

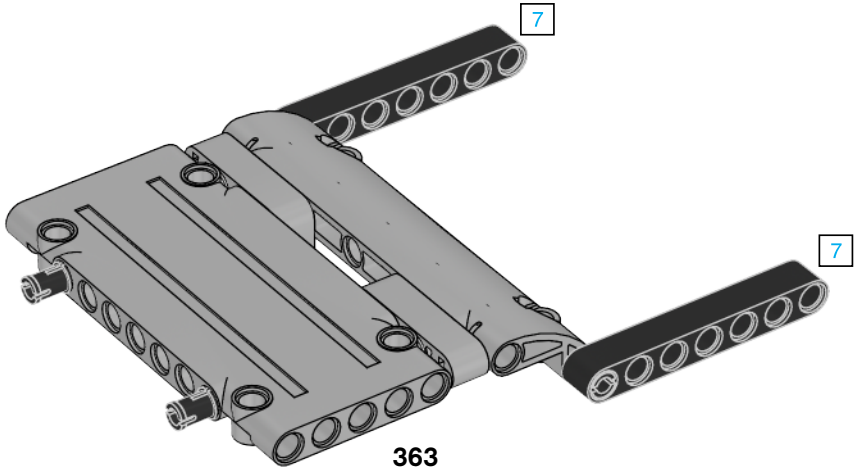

7

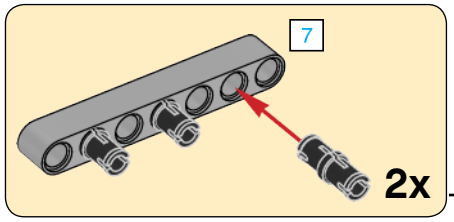

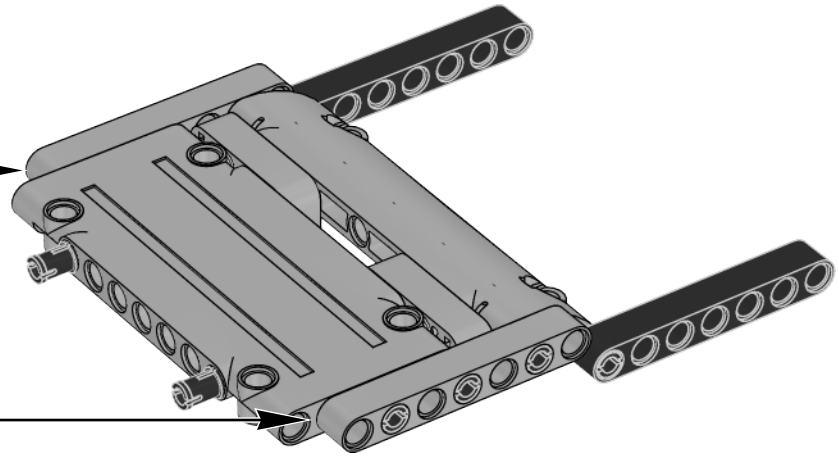

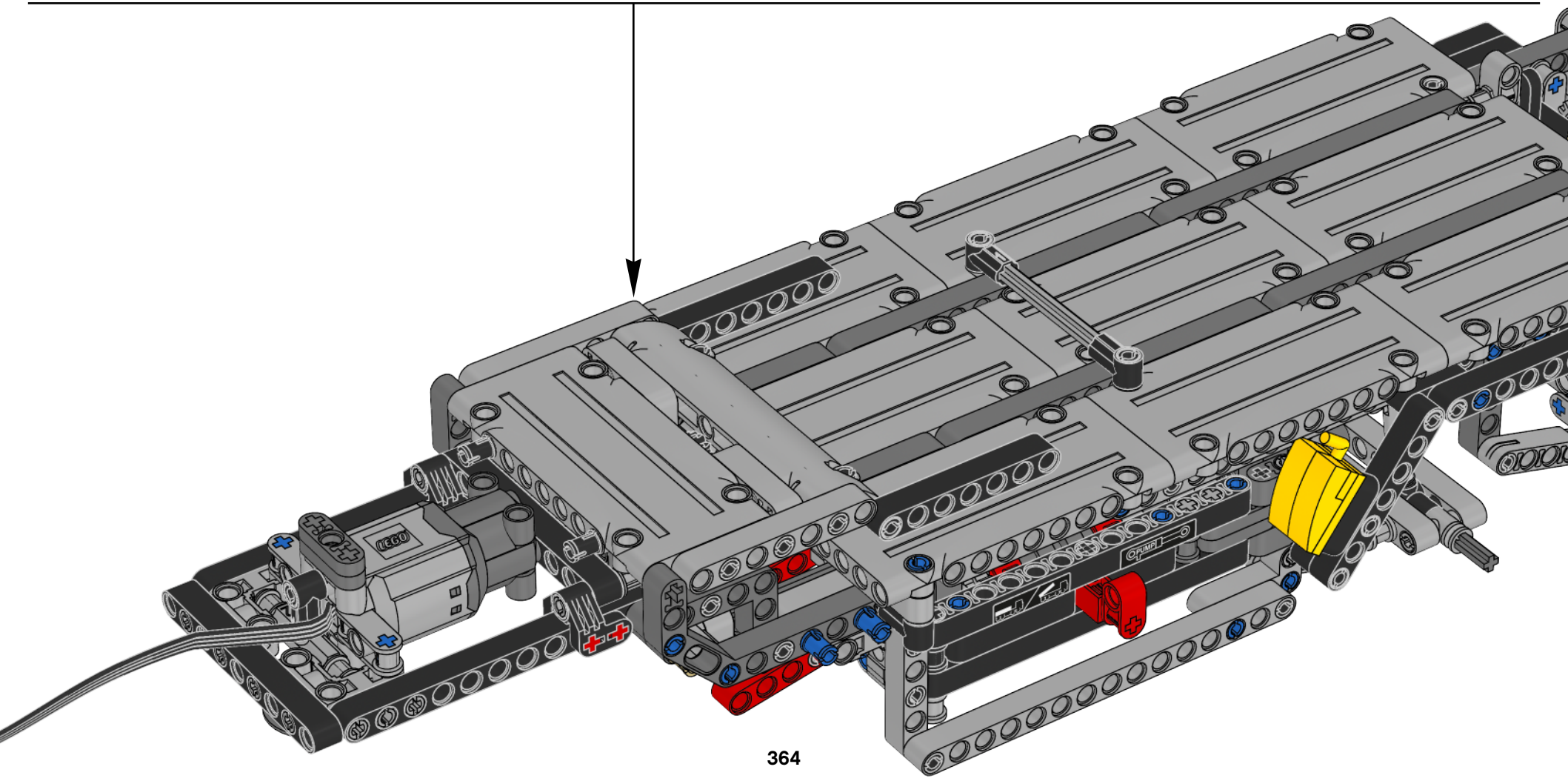

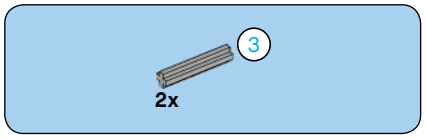

68

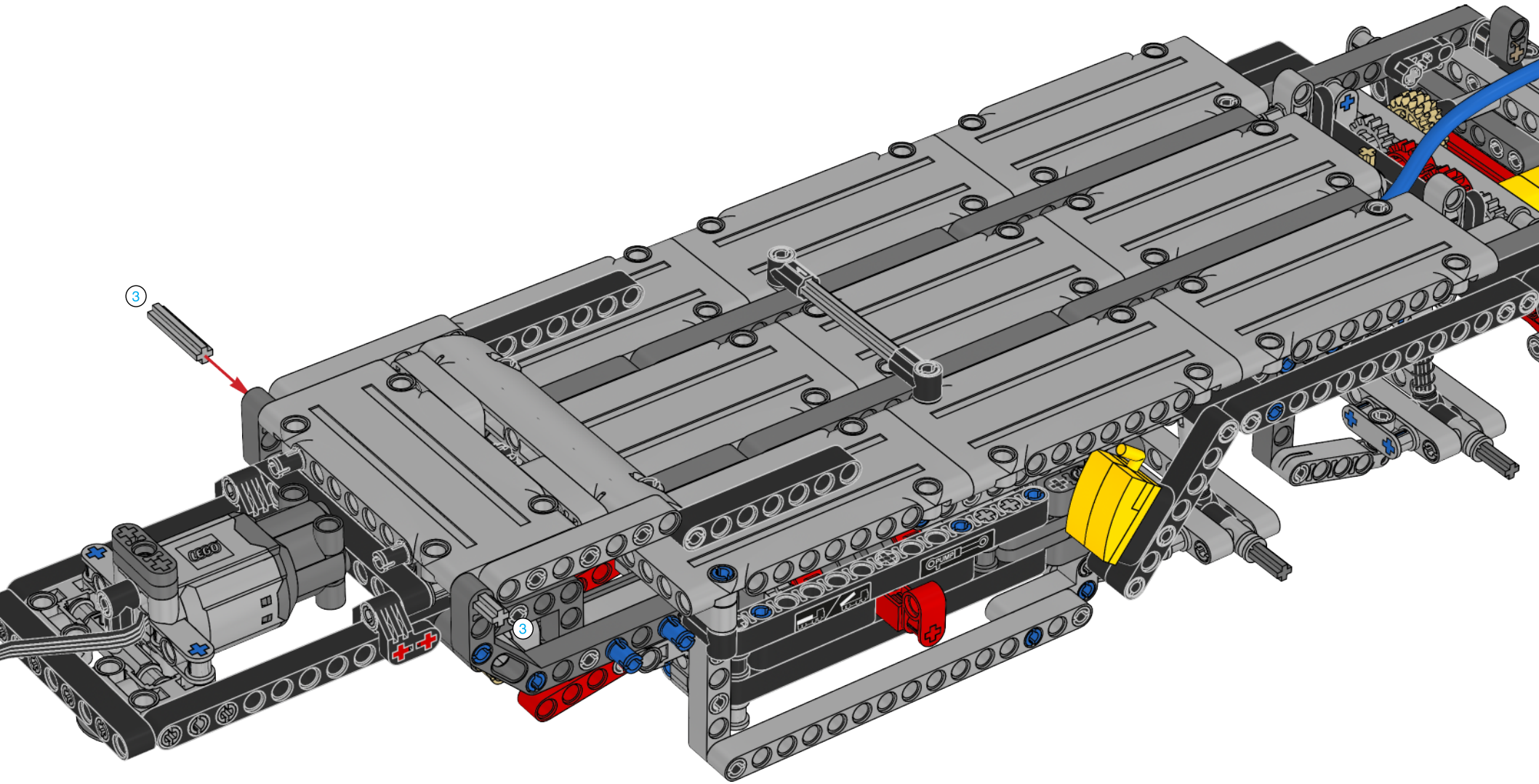

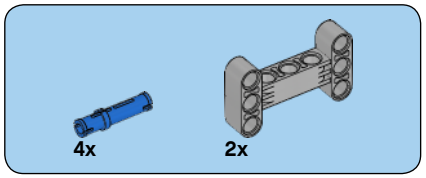

69

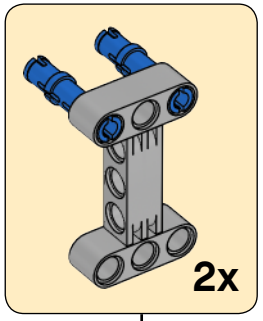

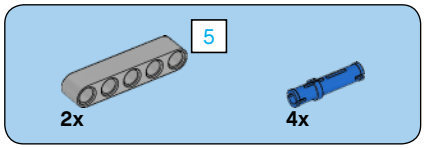

70

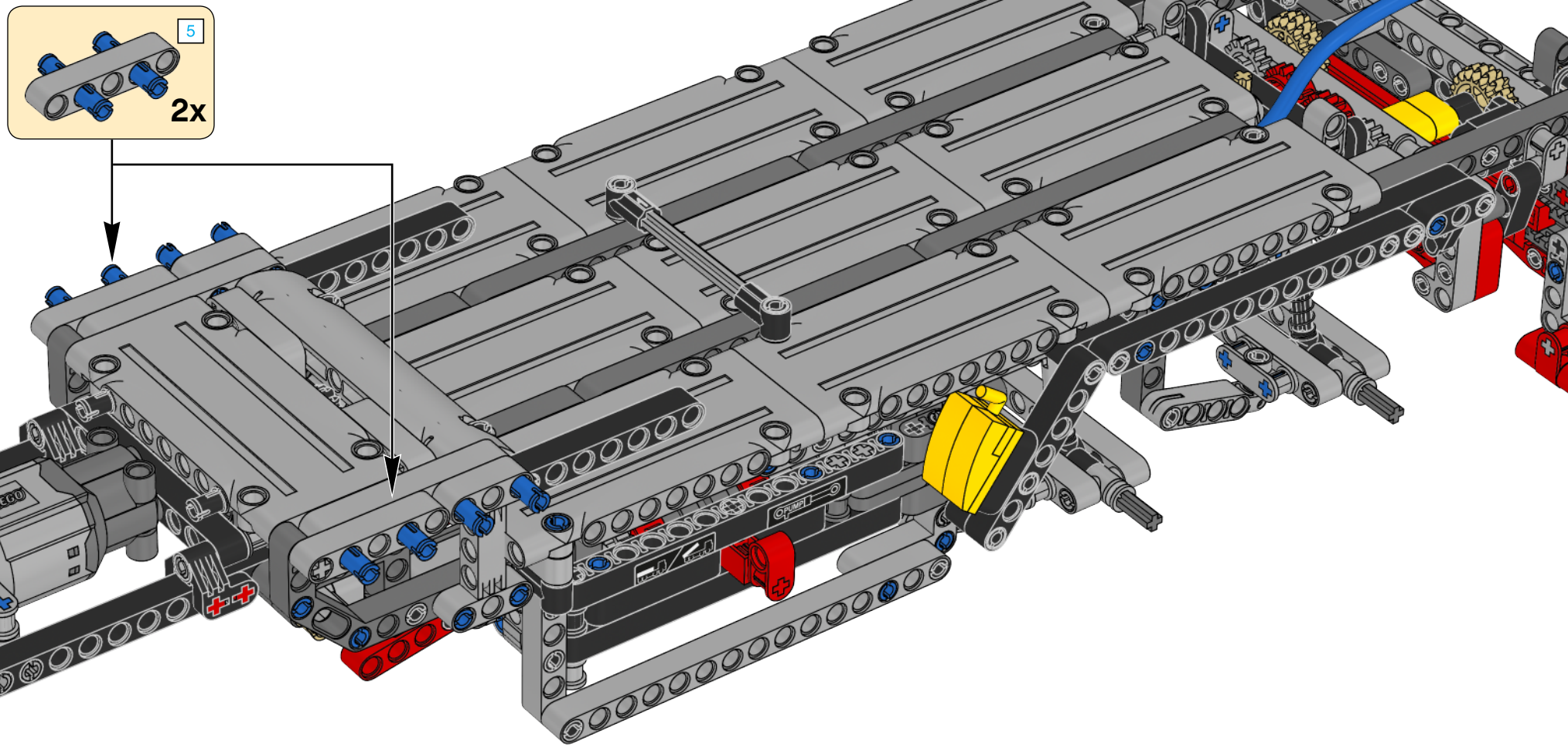

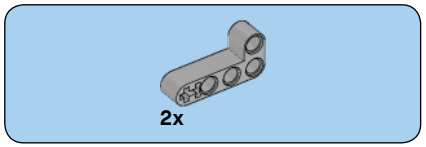

71

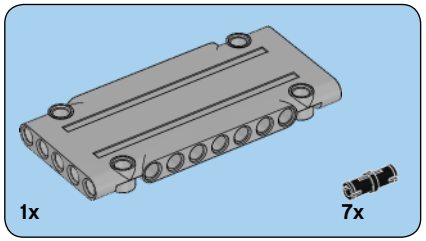

72

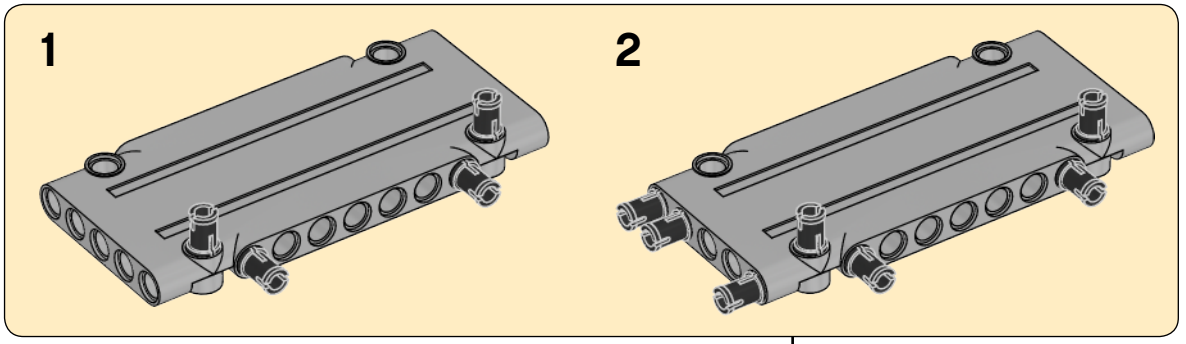

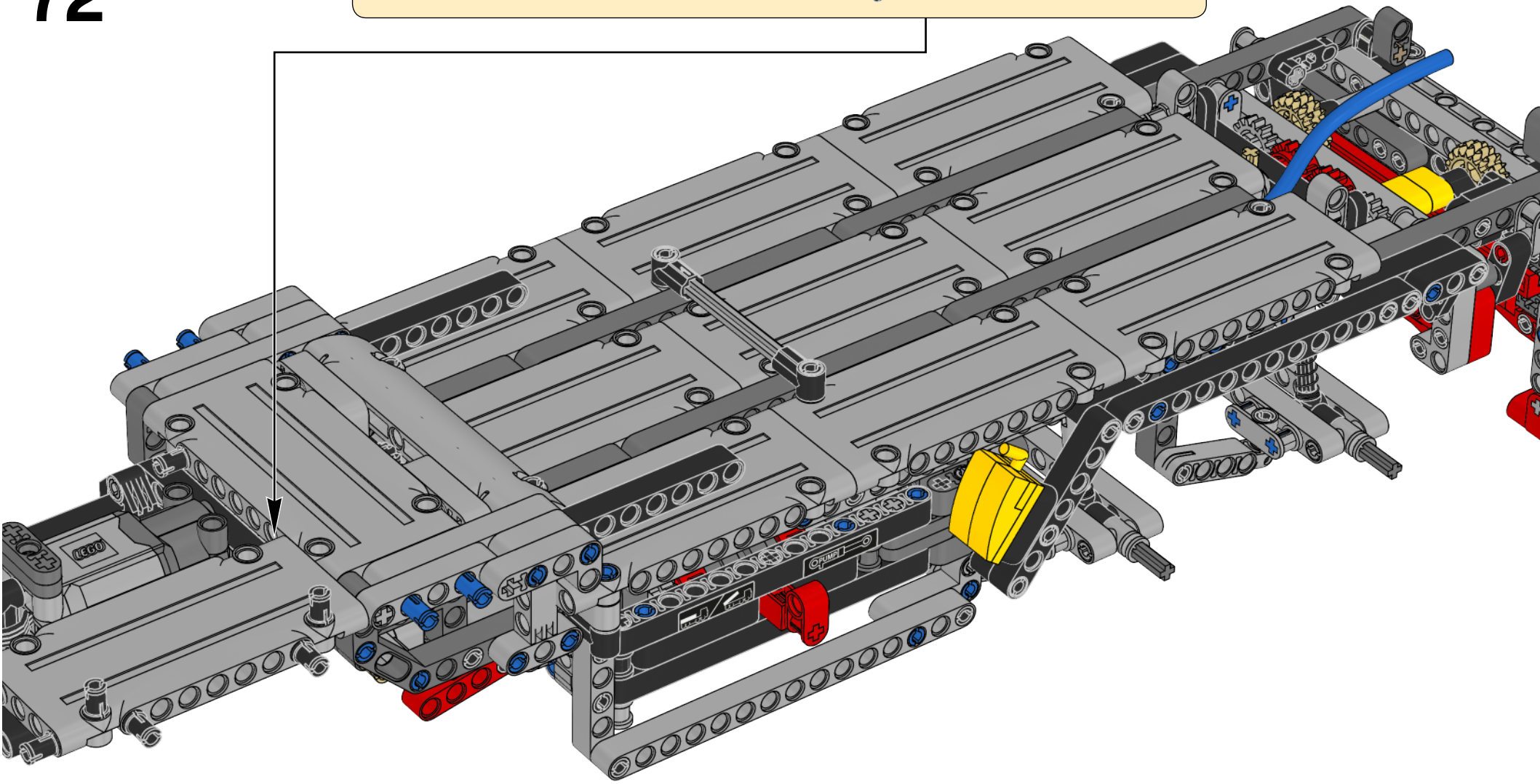

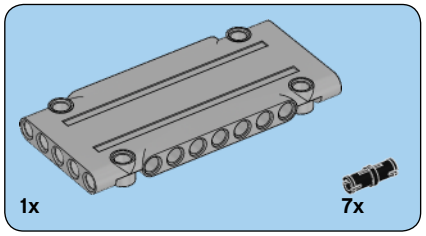

73

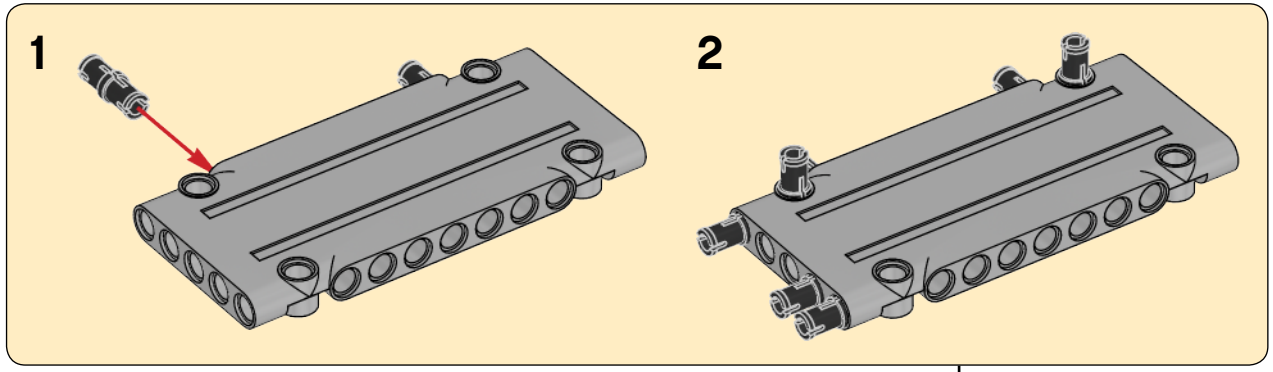

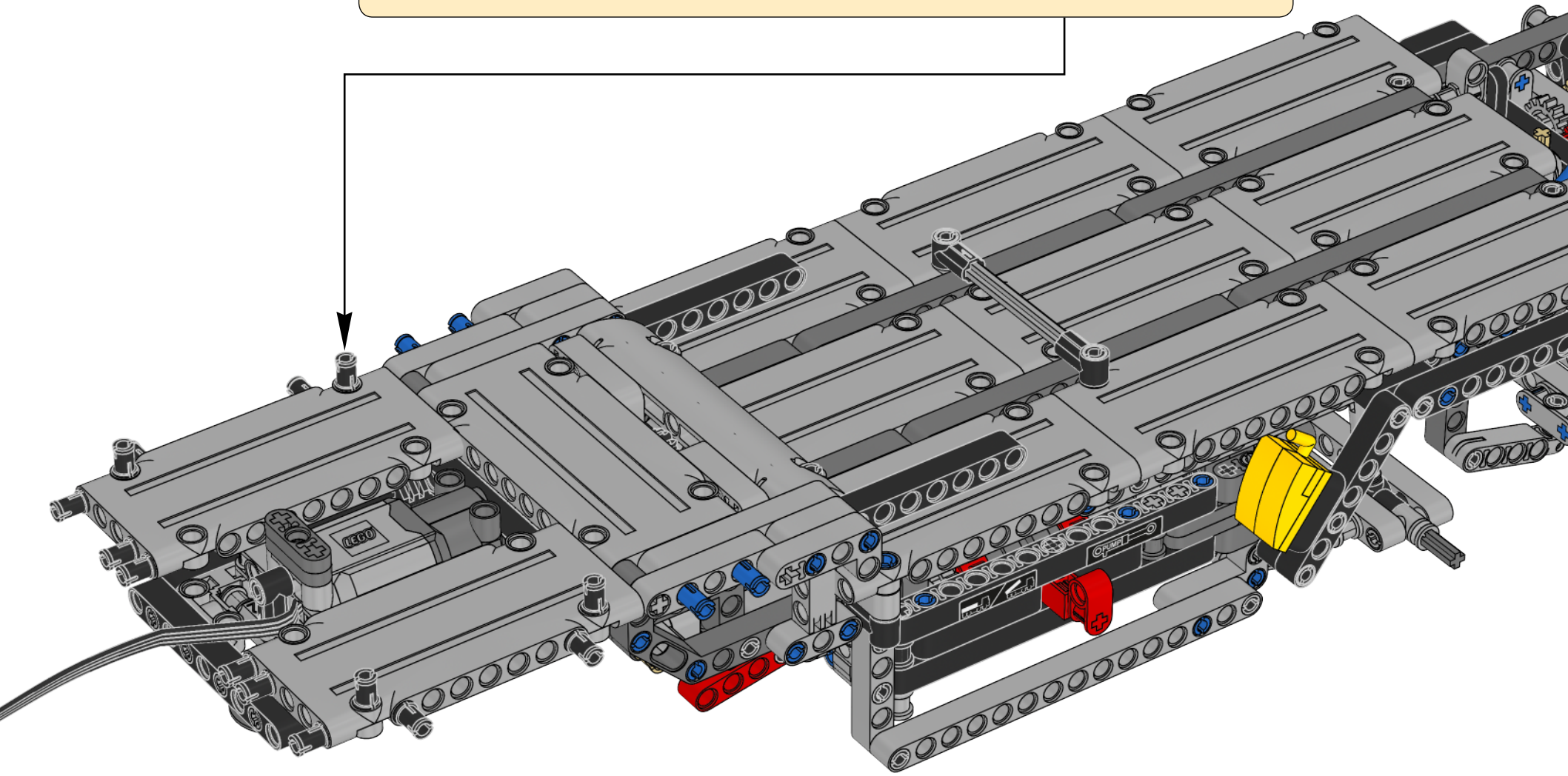

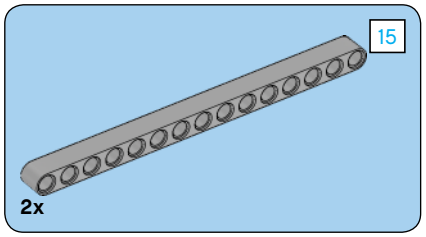

74

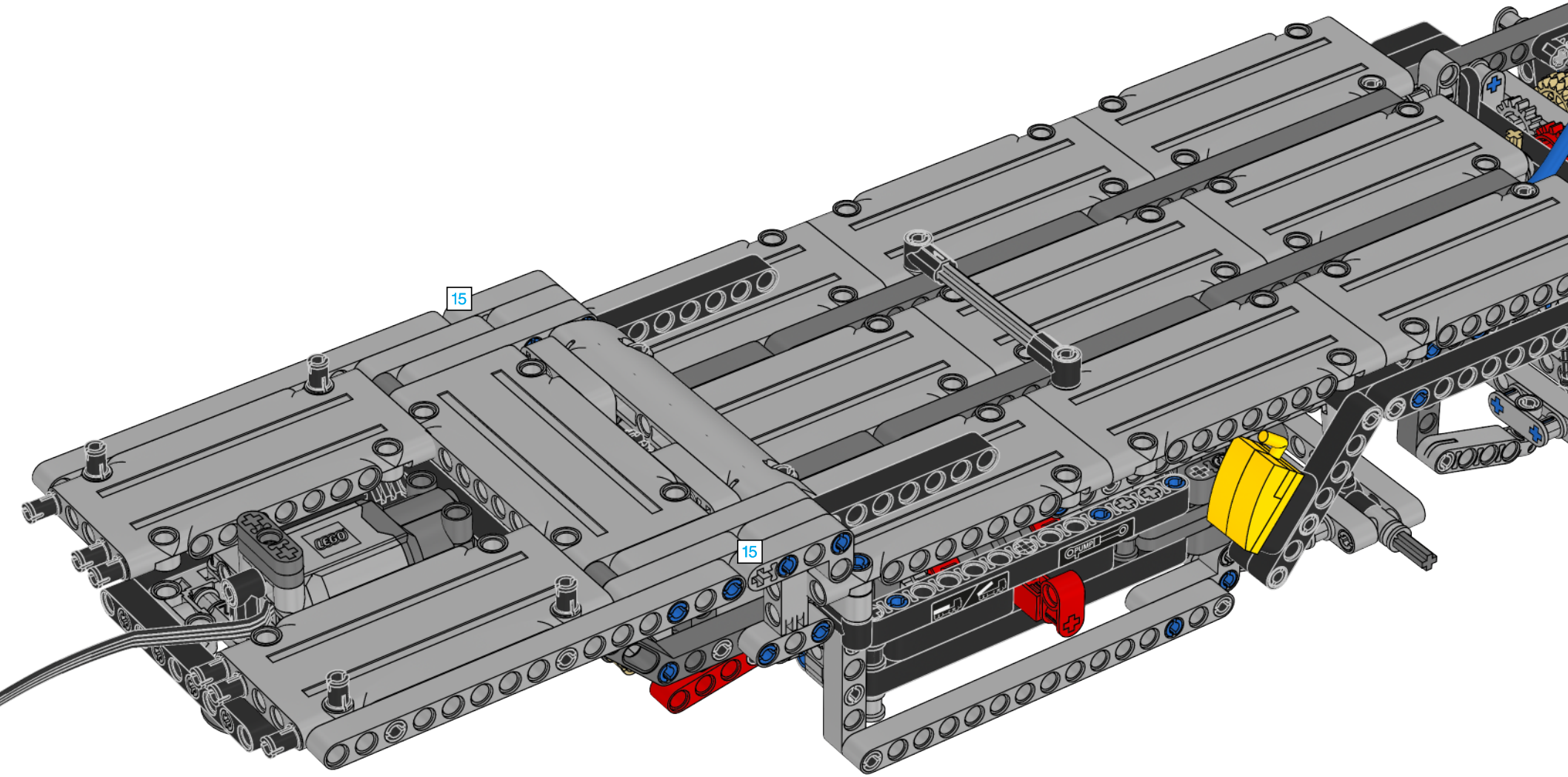

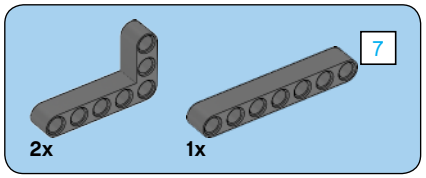

75

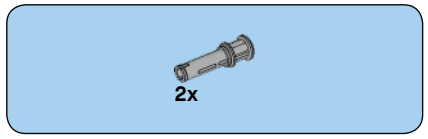

76

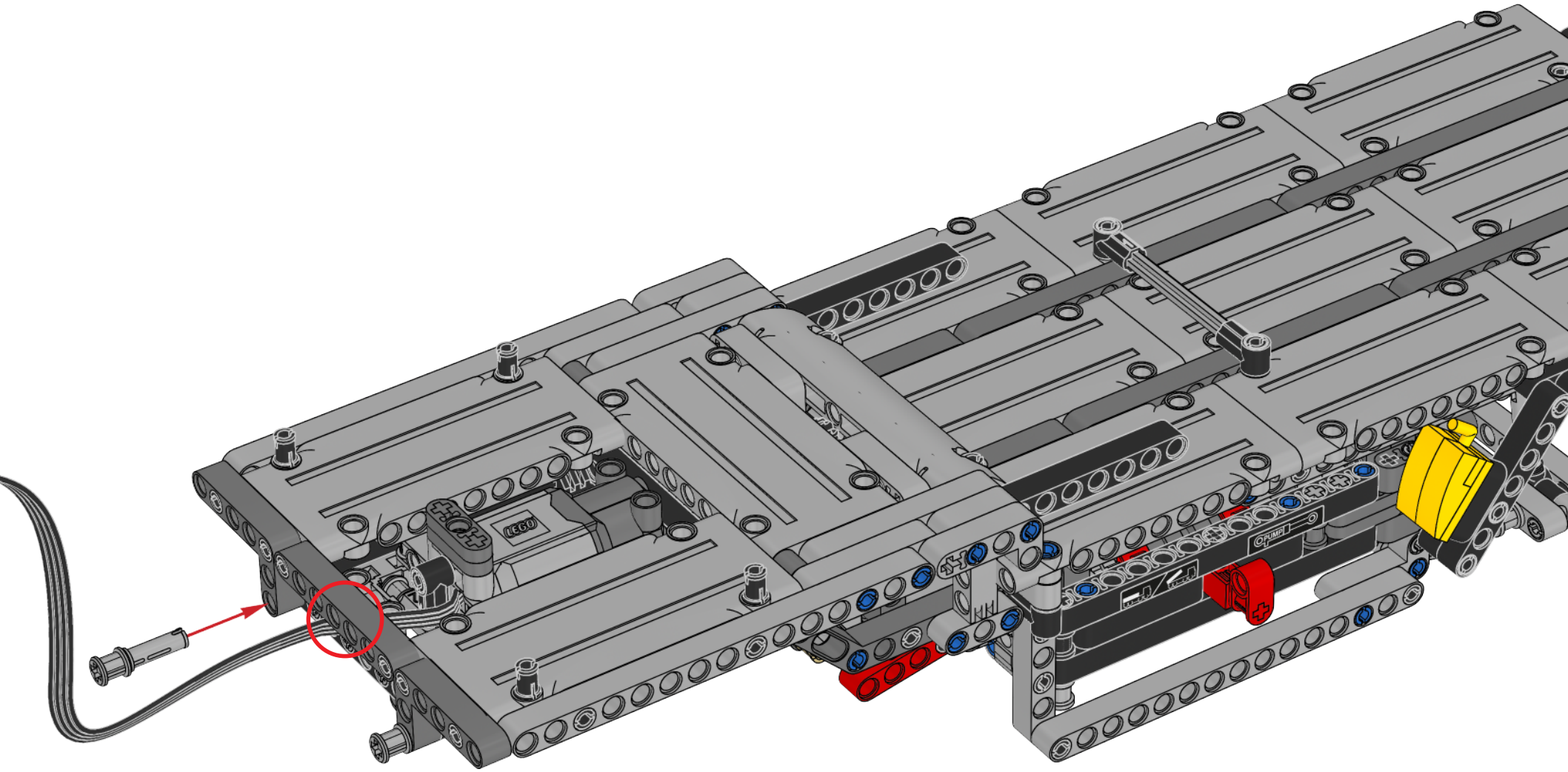

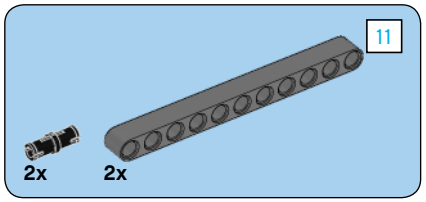

77

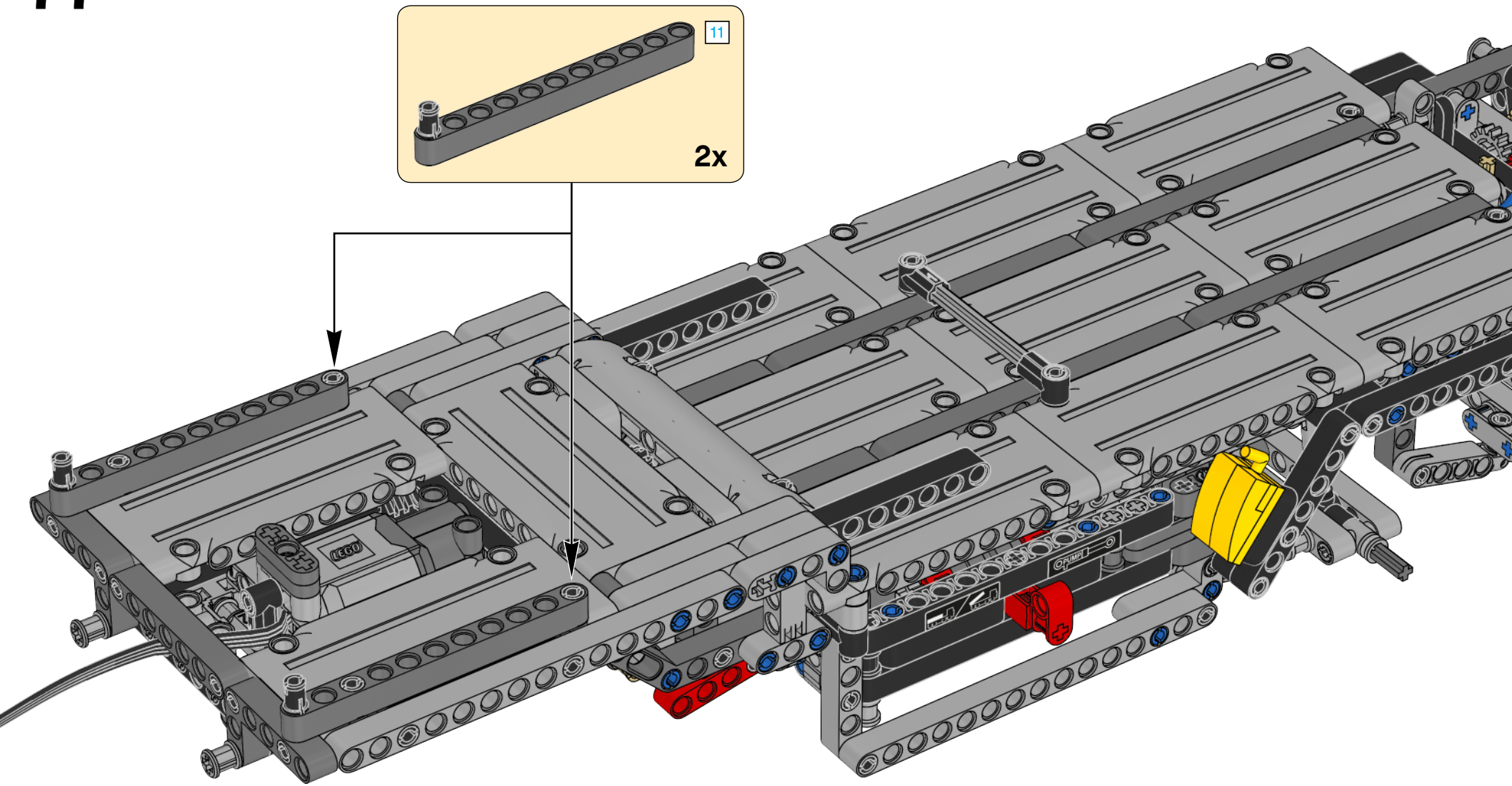

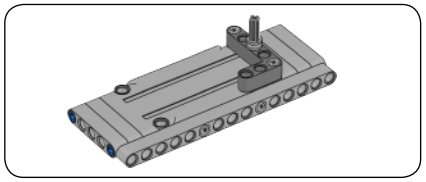

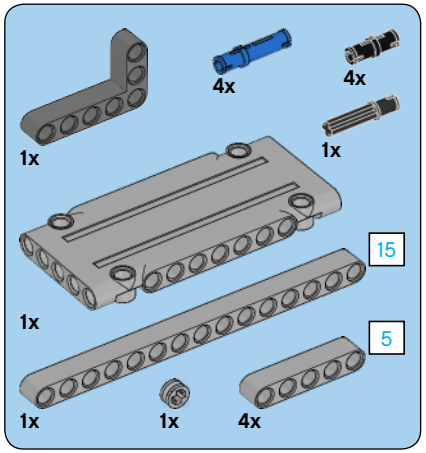

78

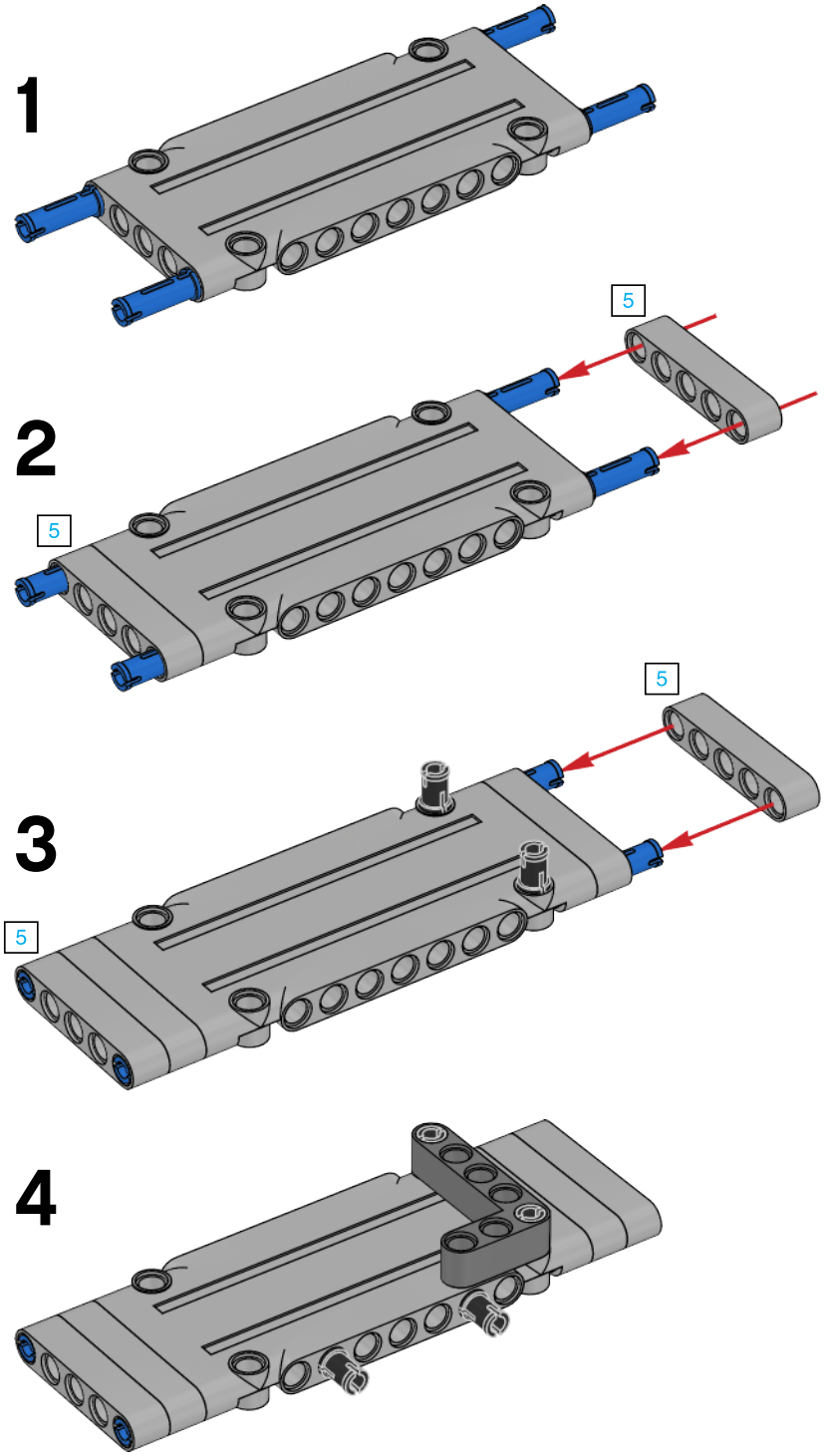

5

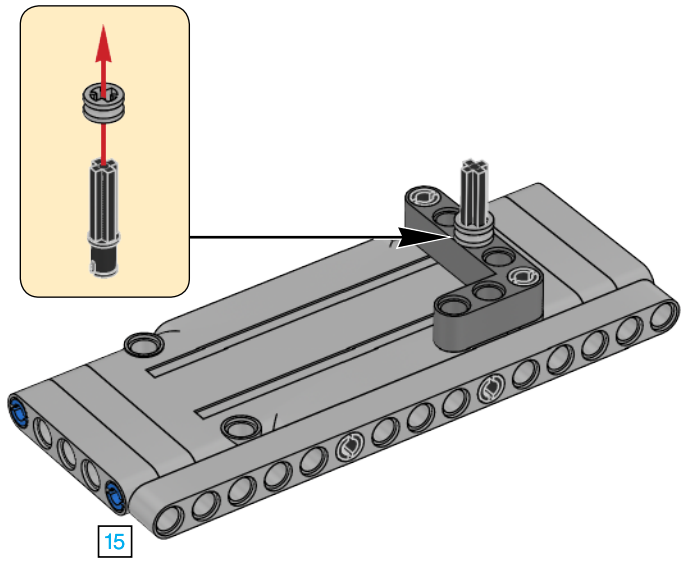

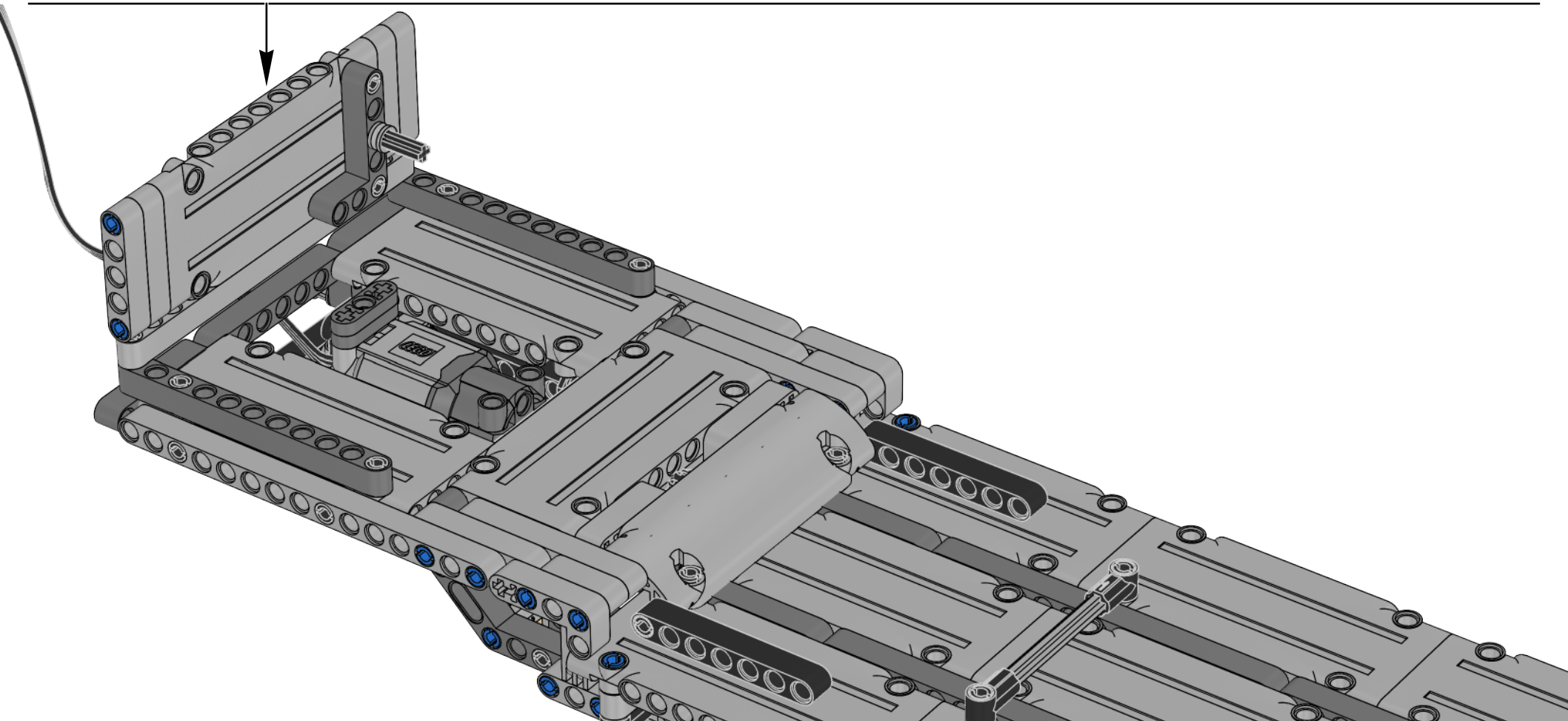

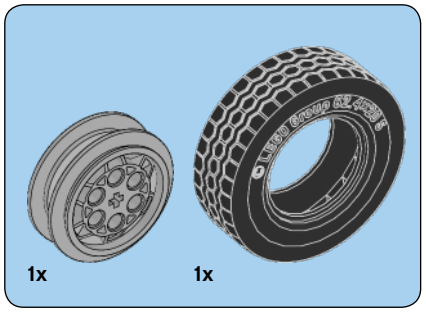

79

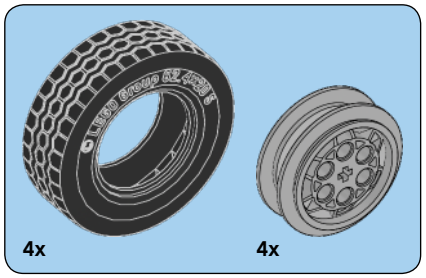

80

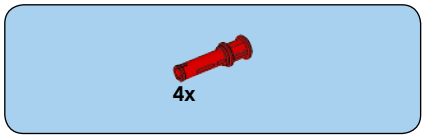

81

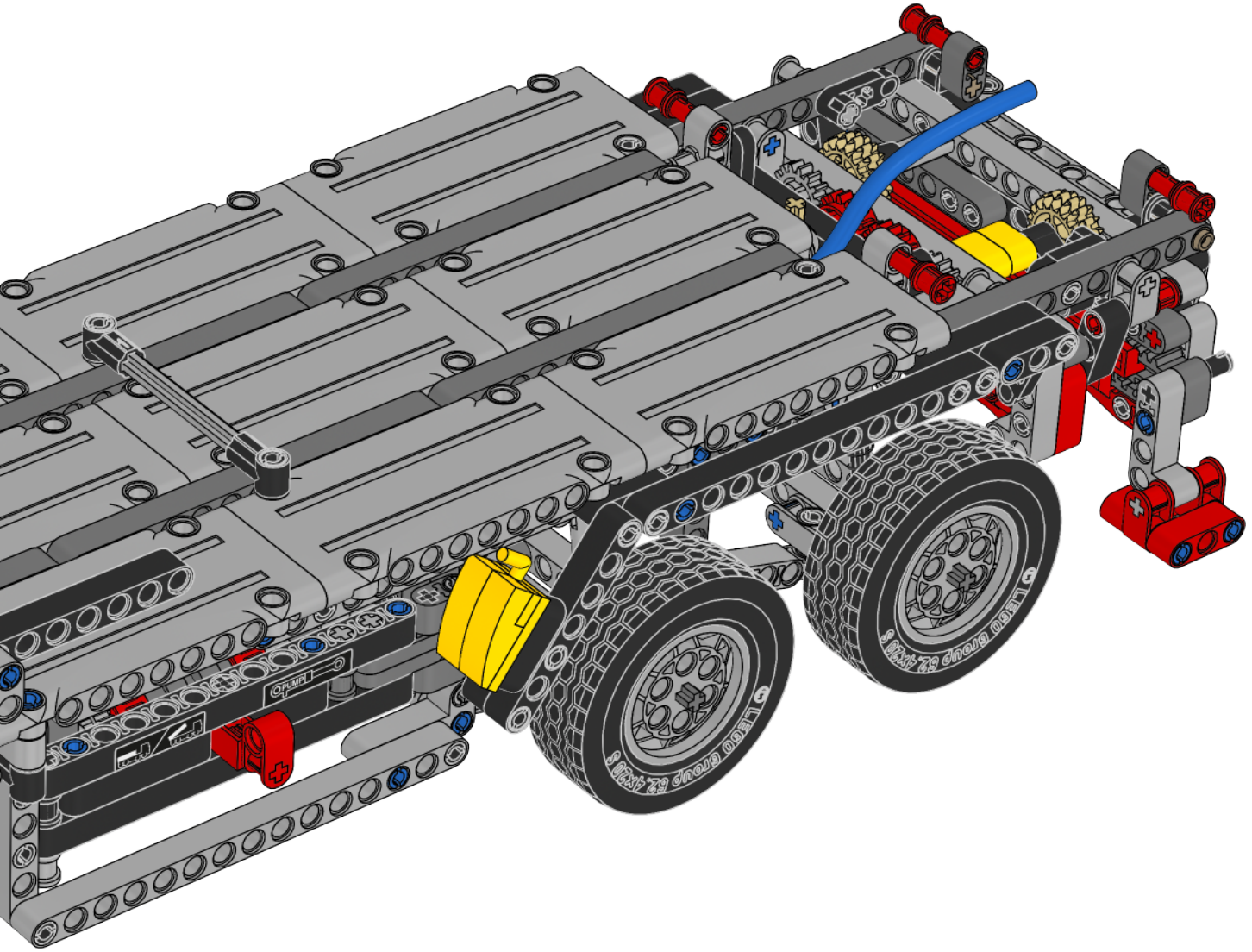

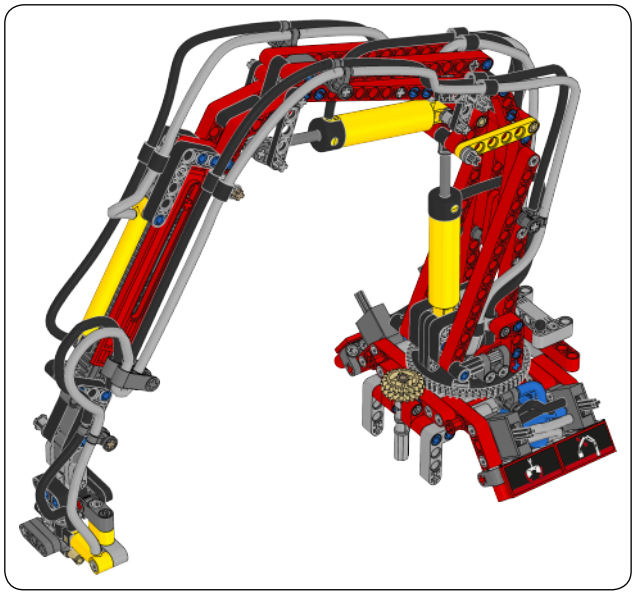

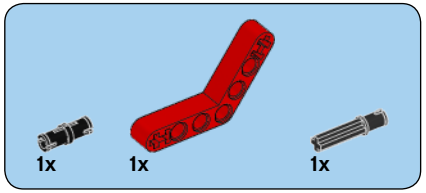

1

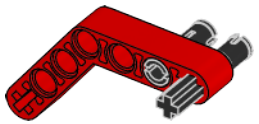

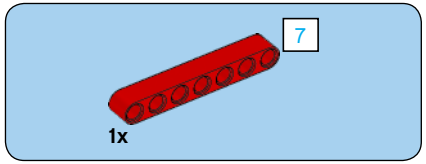

2

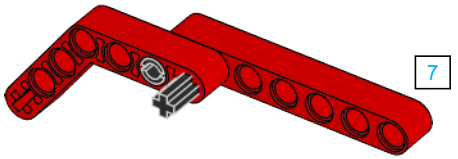

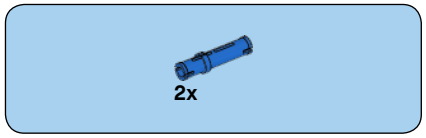

3

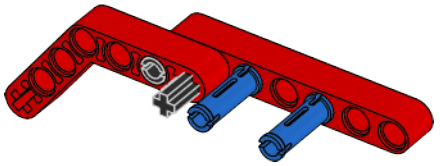

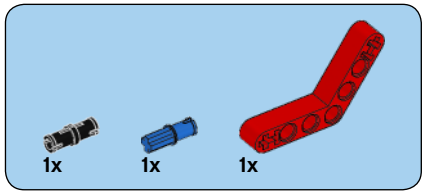

4

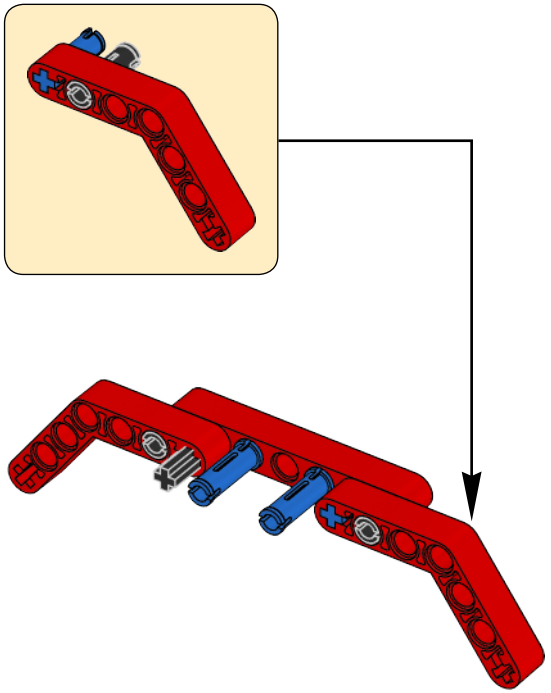

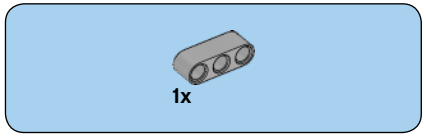

5

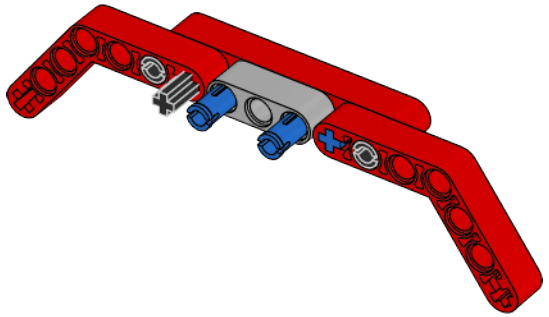

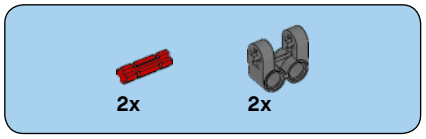

6

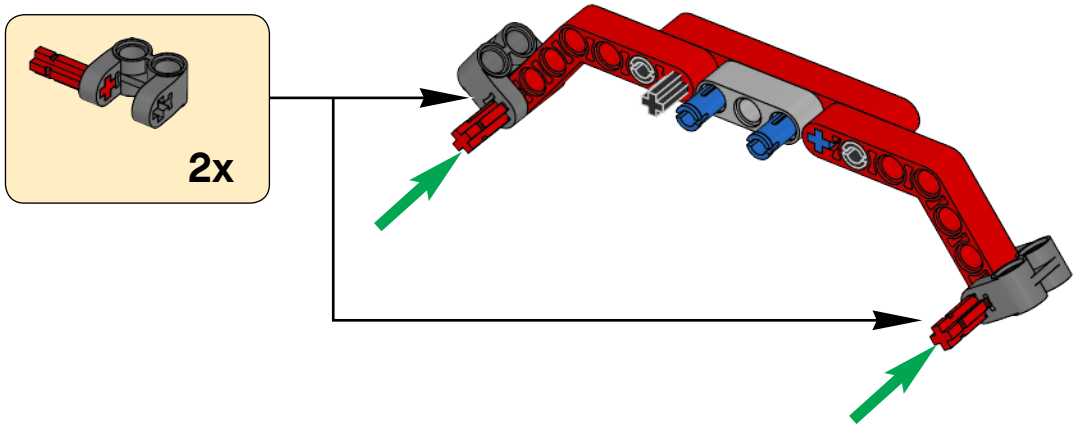

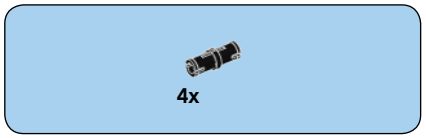

7

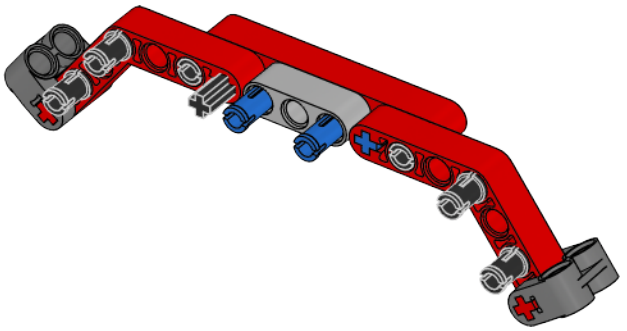

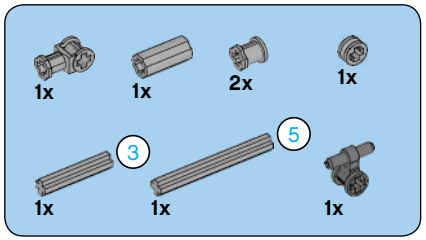

8

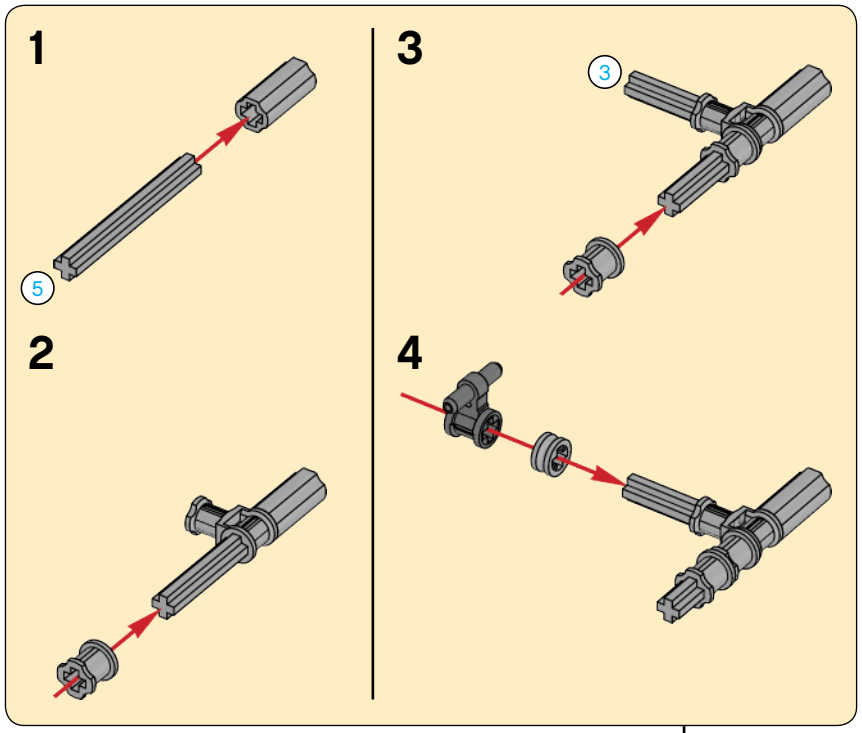

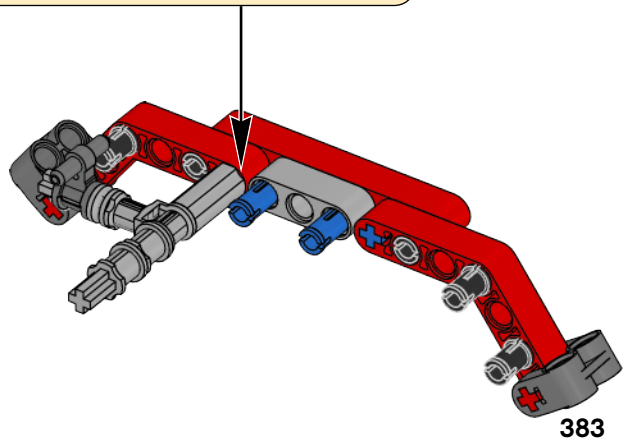

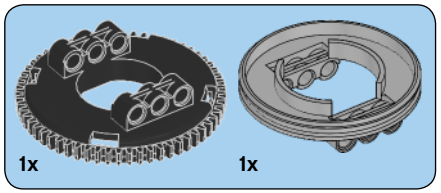

9

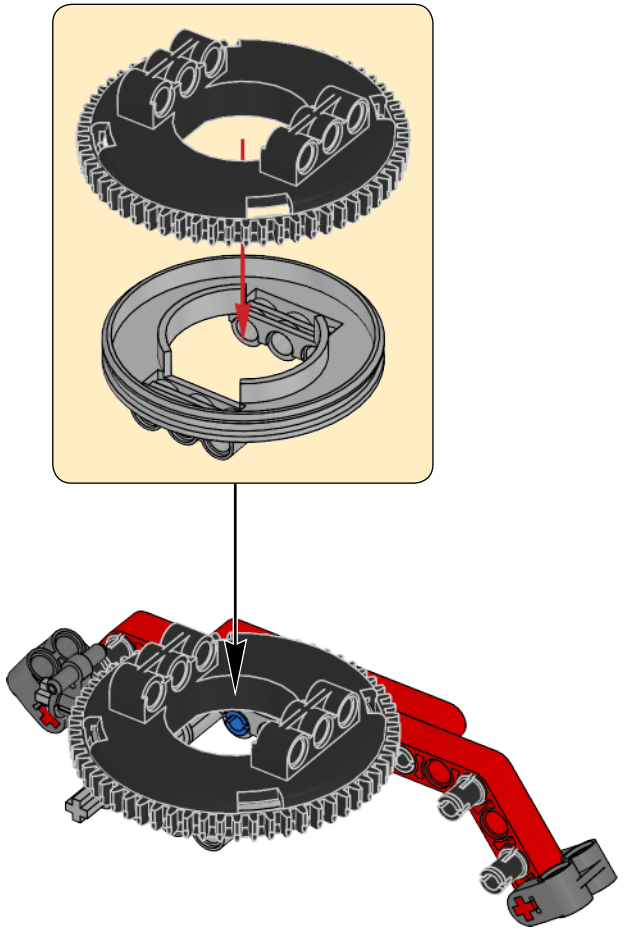

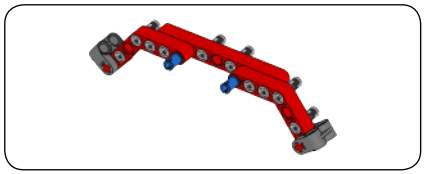

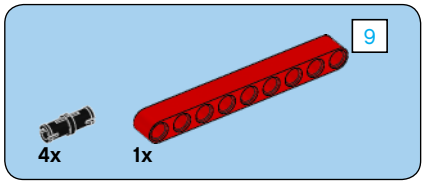

1

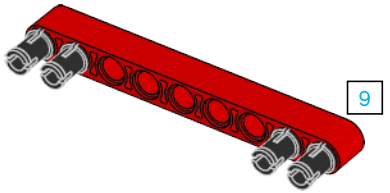

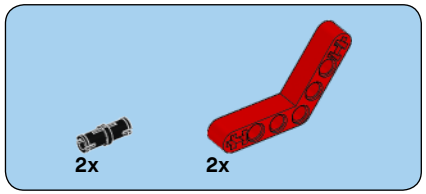

2

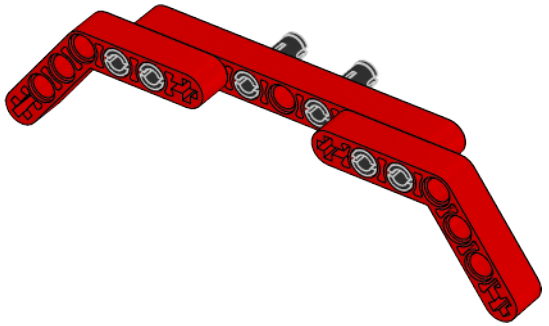

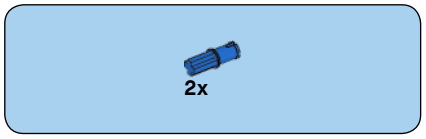

3

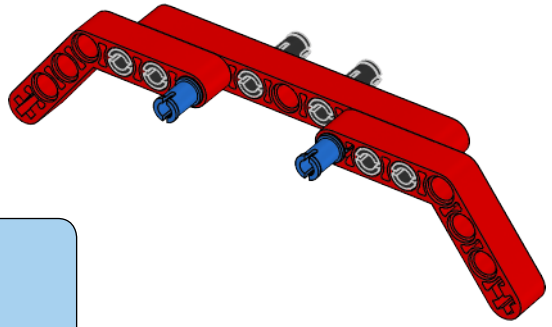

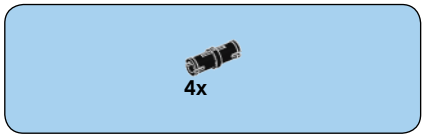

4

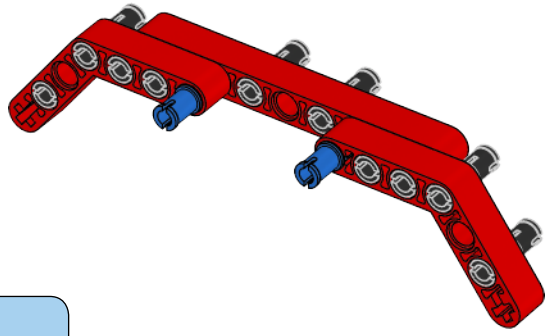

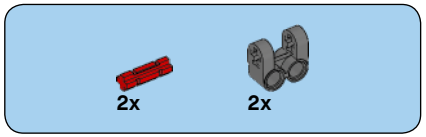

5

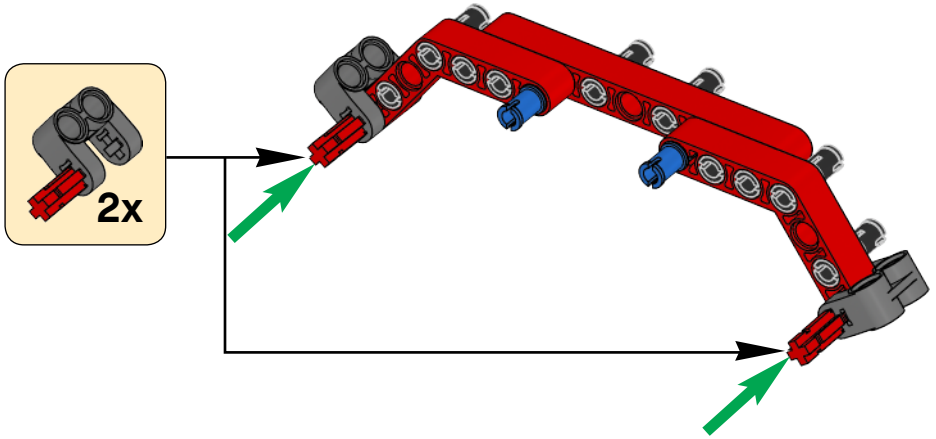

6

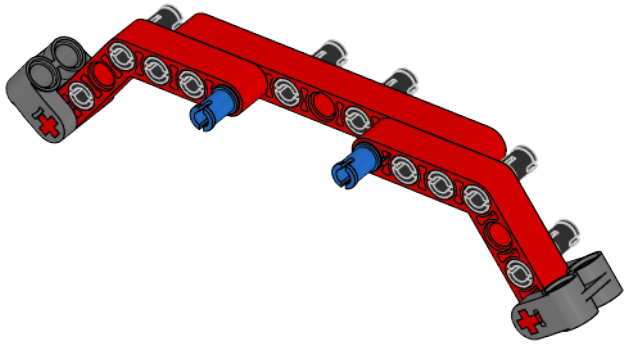

10

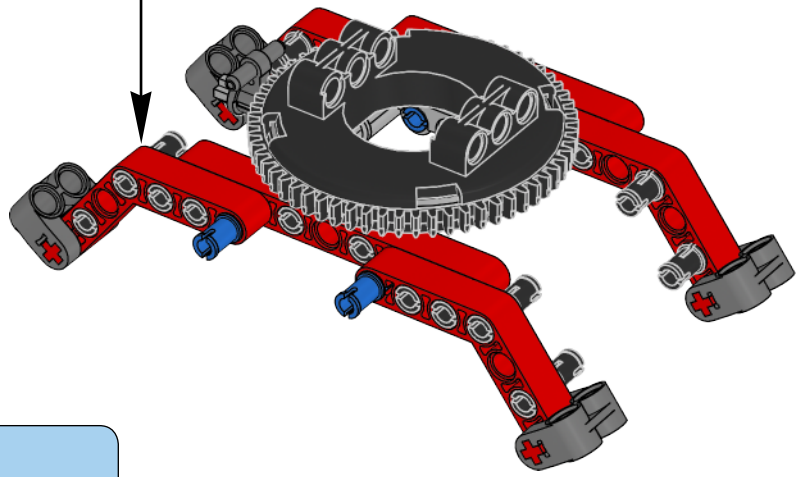

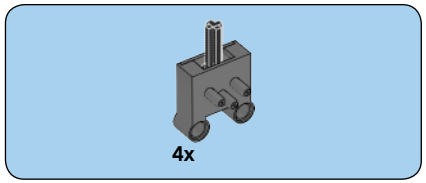

11

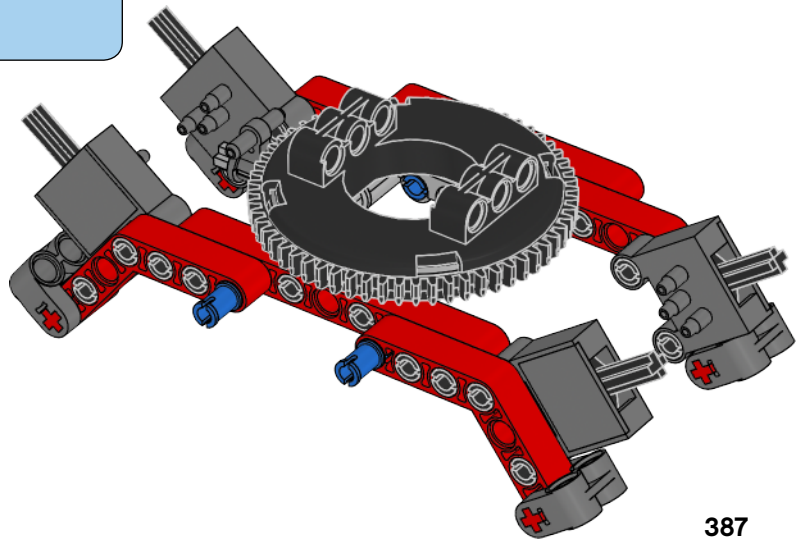

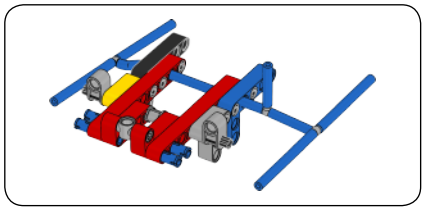

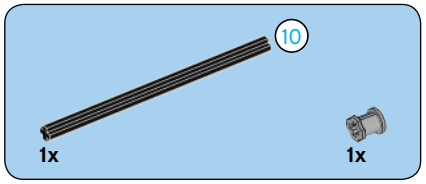

1

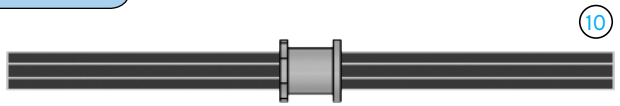

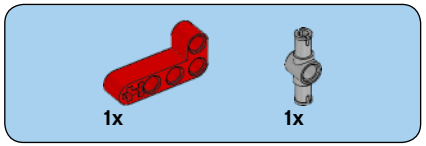

2

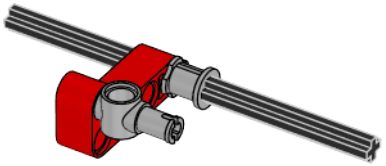

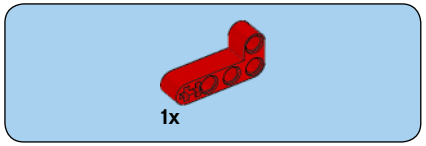

3

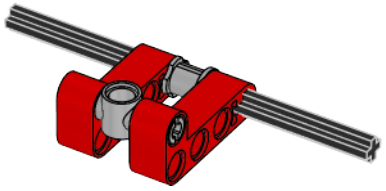

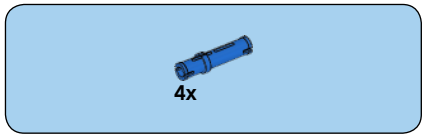

4

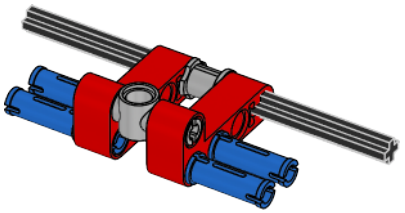

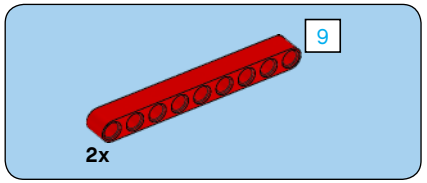

5

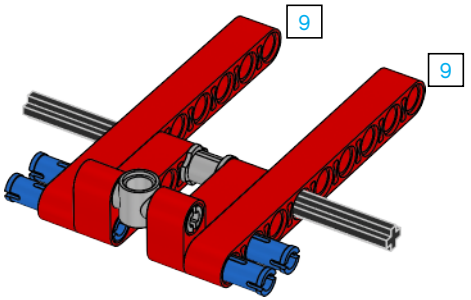

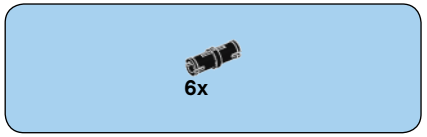

6

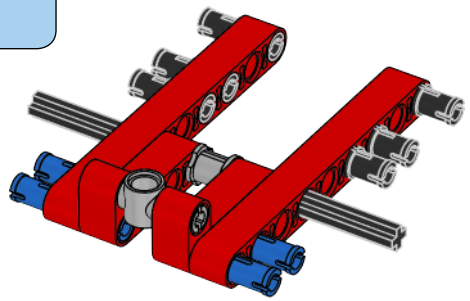

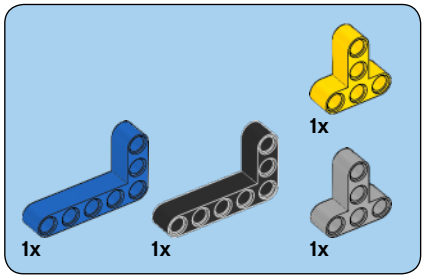

7

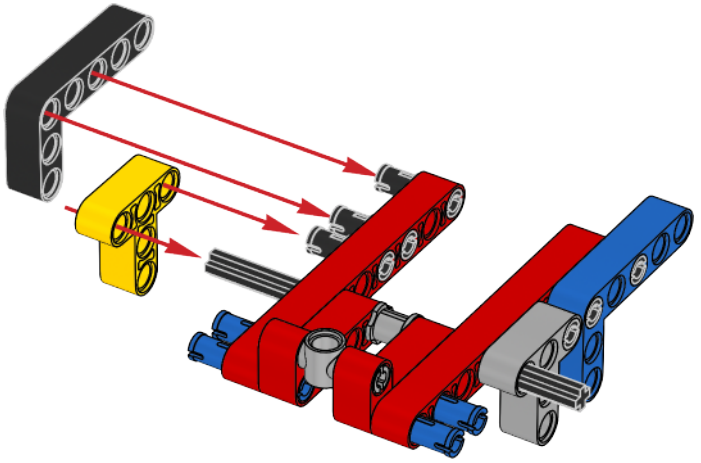

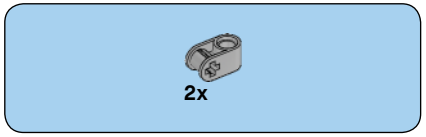

8

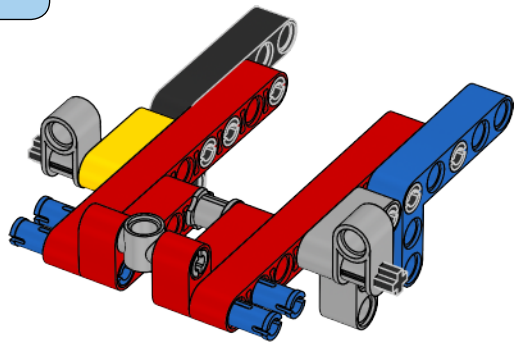

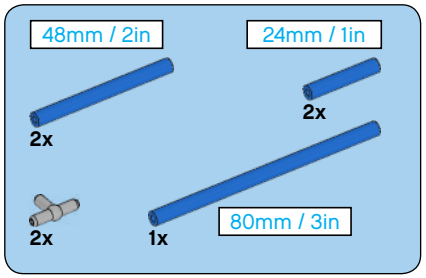
48mm / 2in
24mm / 1in
2x
2x
2x
1x
80mm / 3in

9

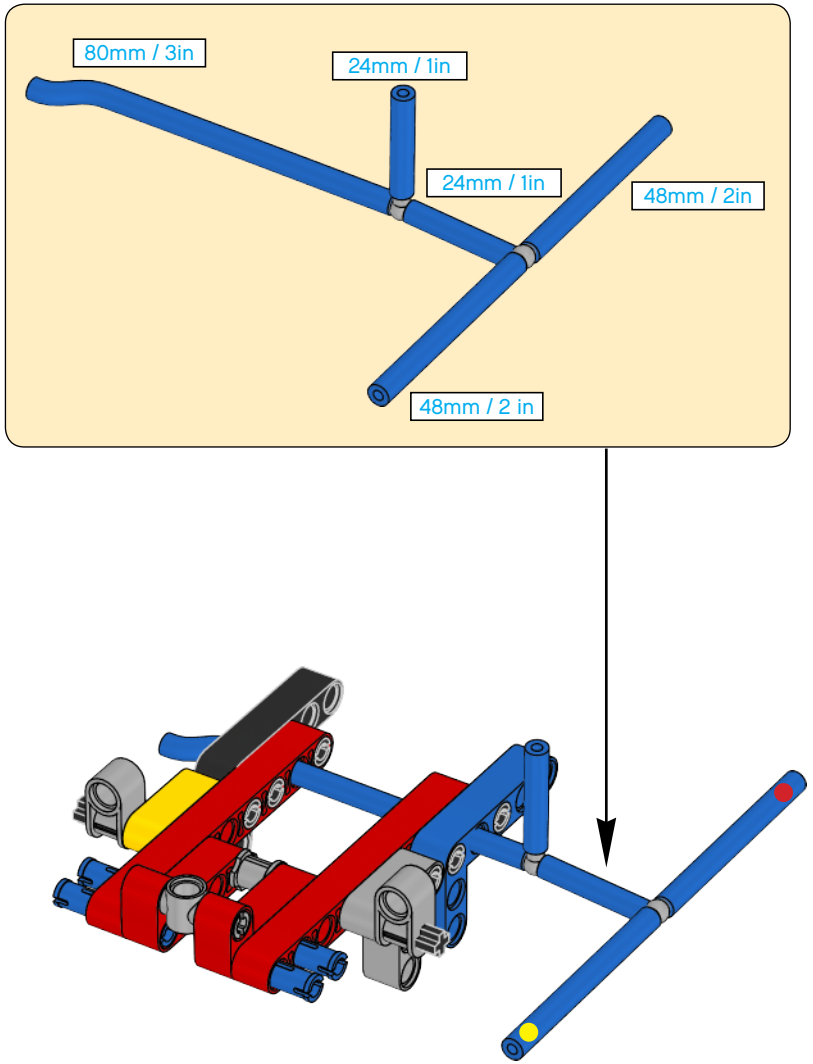
80mm / 3in
24mm / 1in
24mm / 1in
48mm / 2in
48mm / 2 in

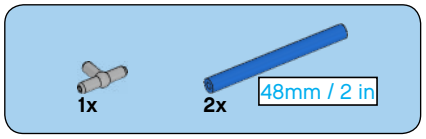

10

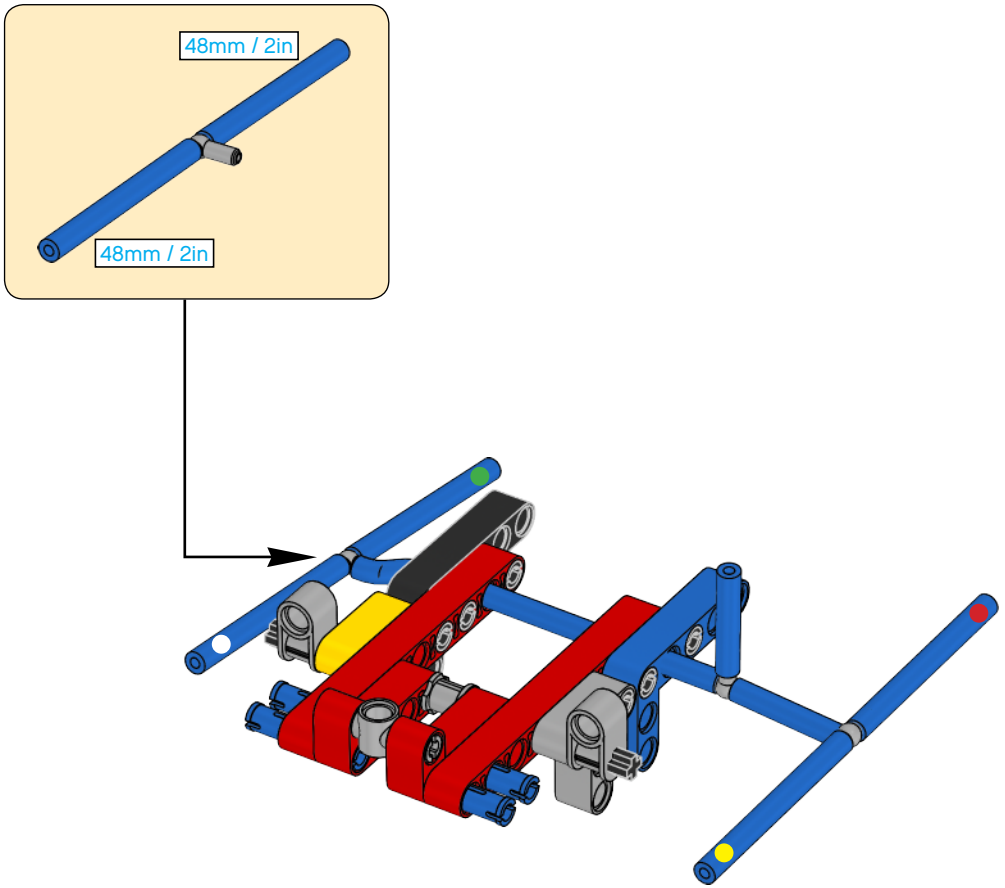

11

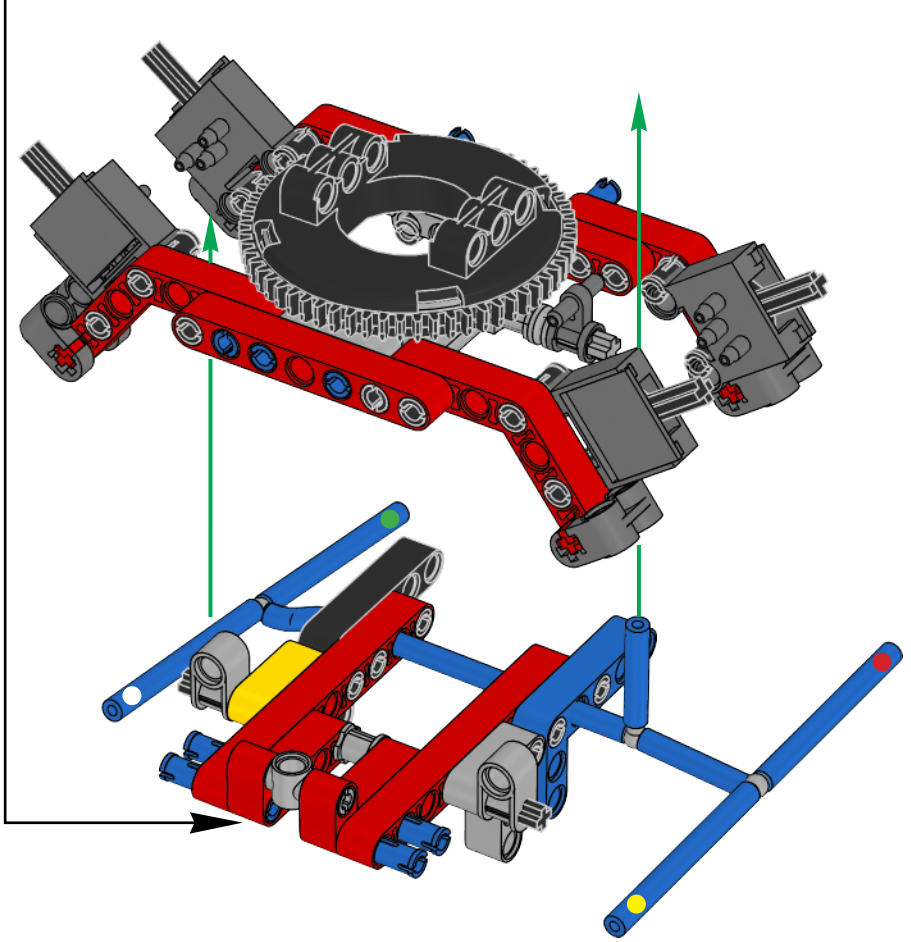

12

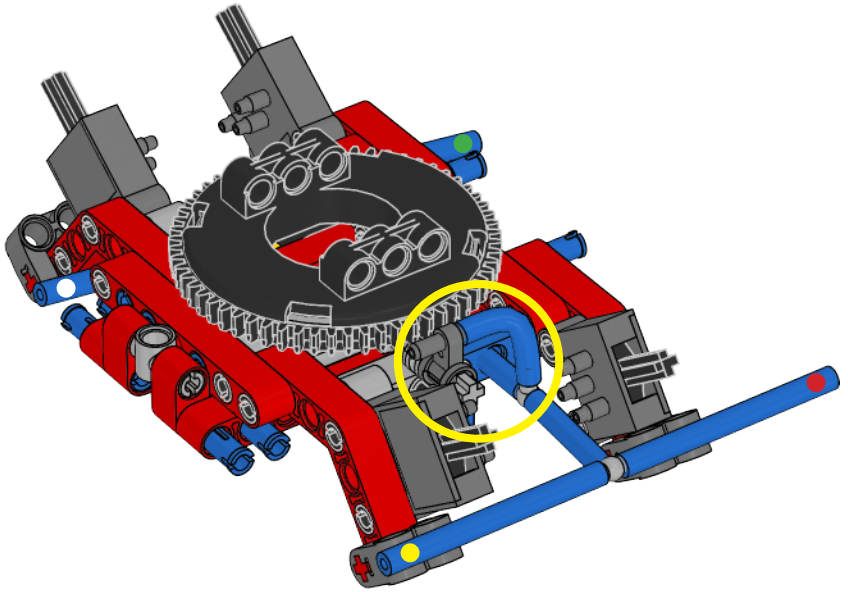

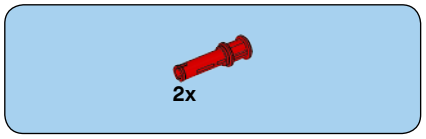

13

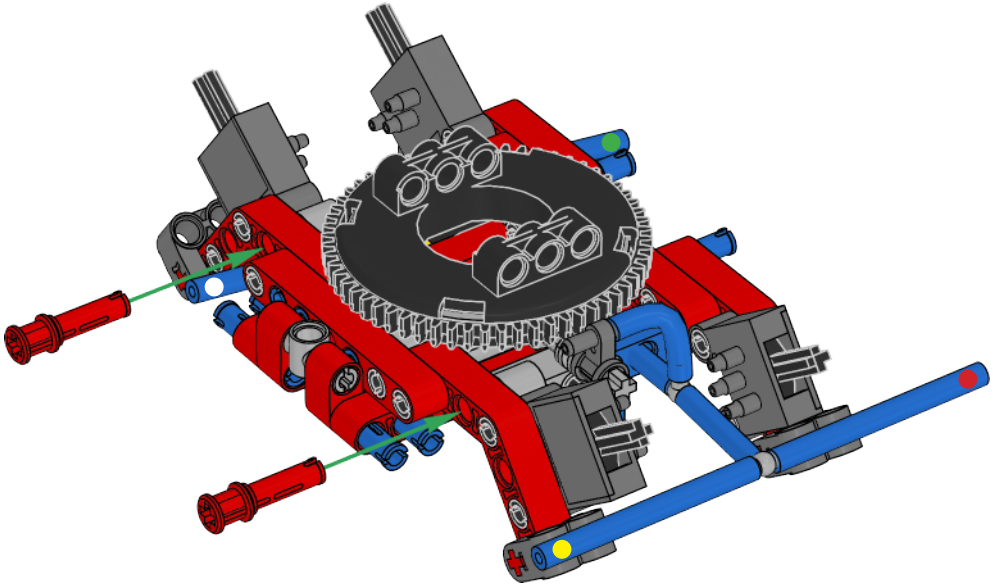

14

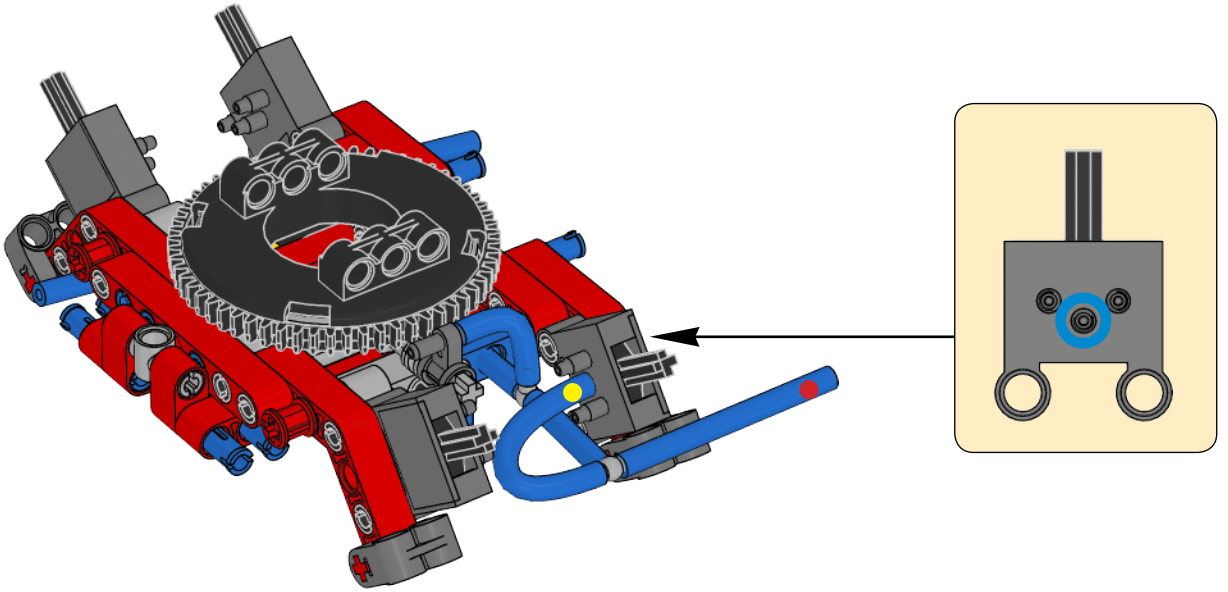

15

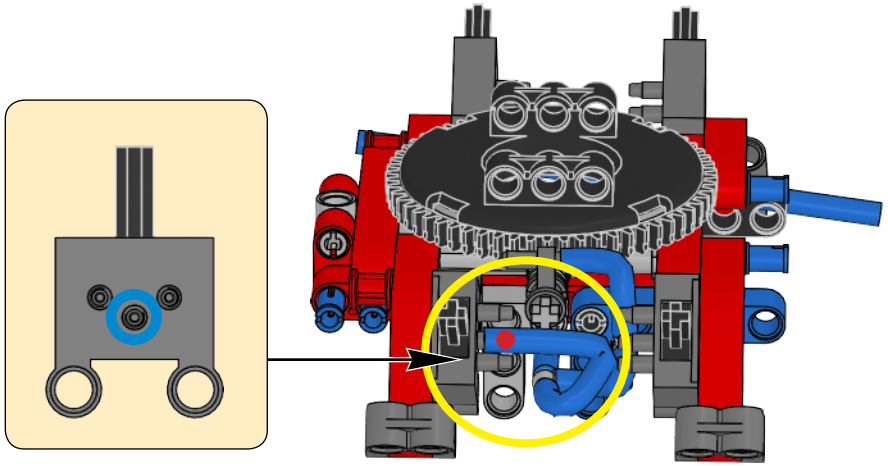

16

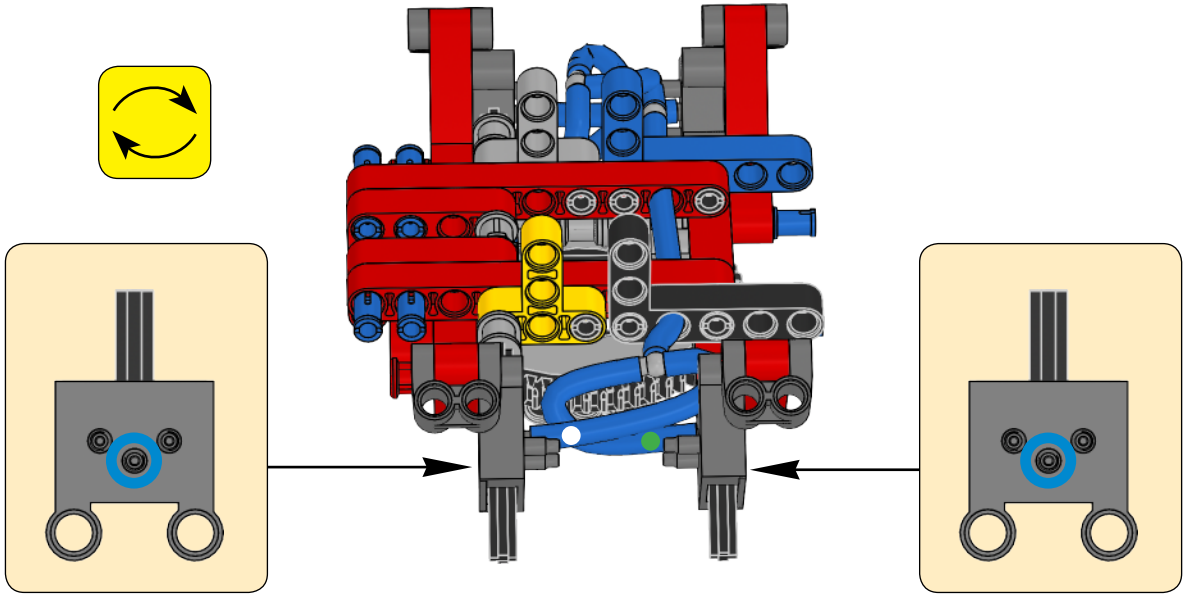

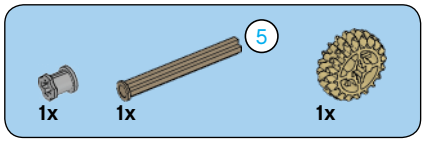

17

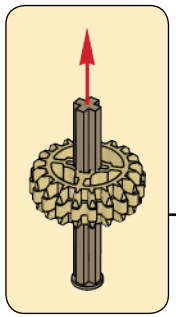

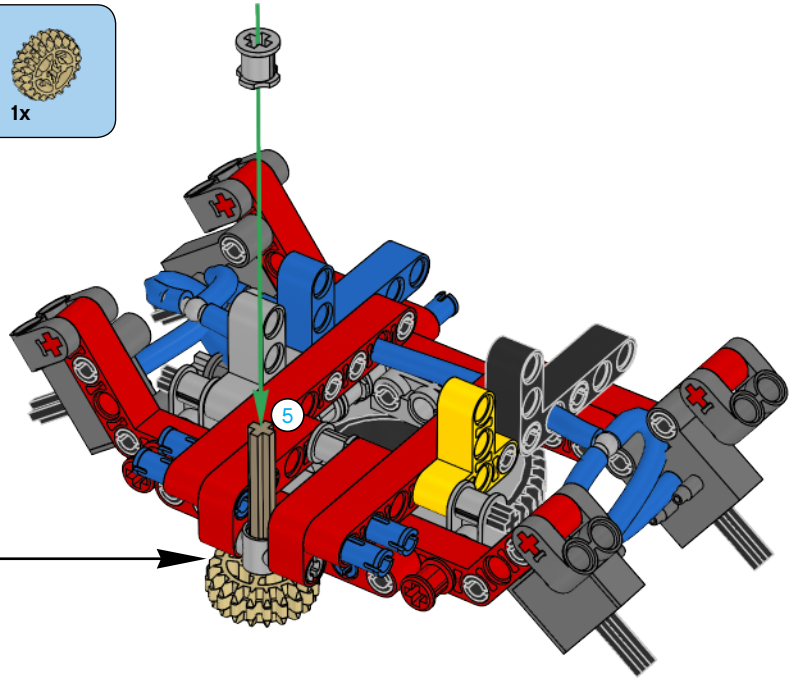

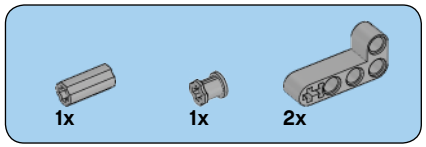

18

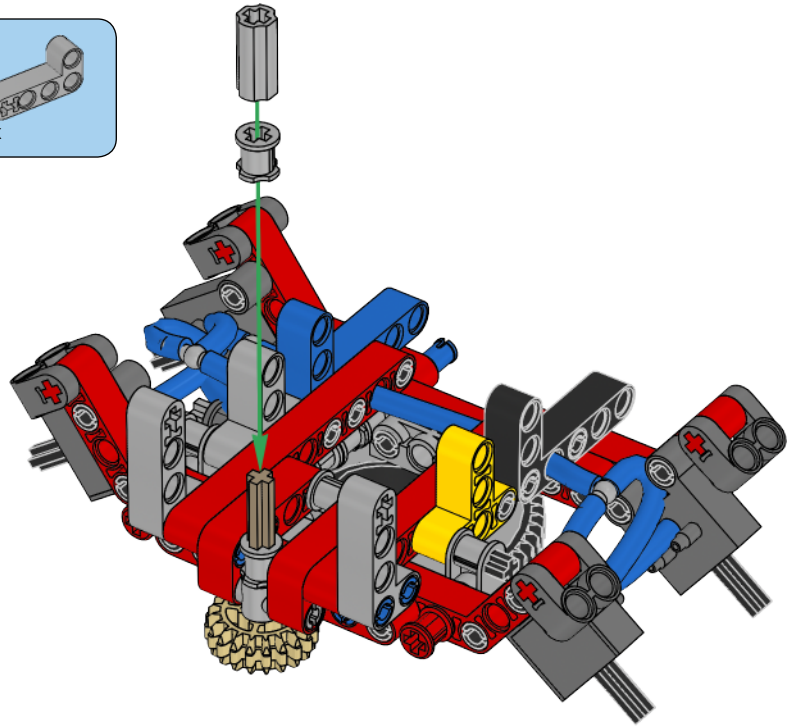

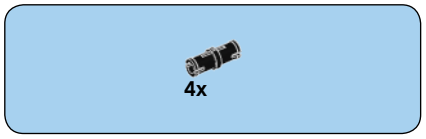

19

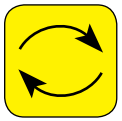

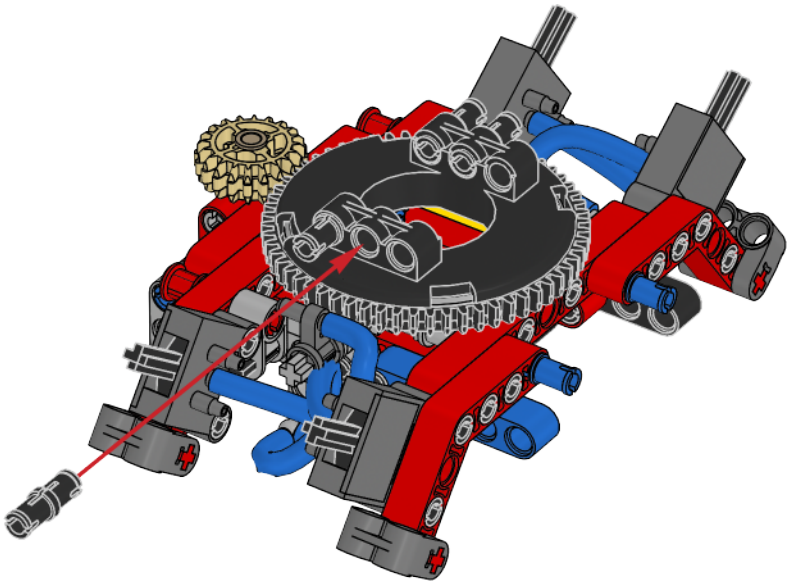

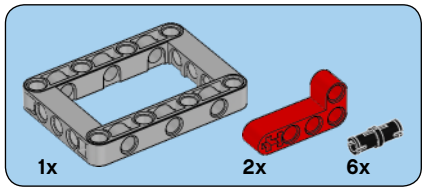

20

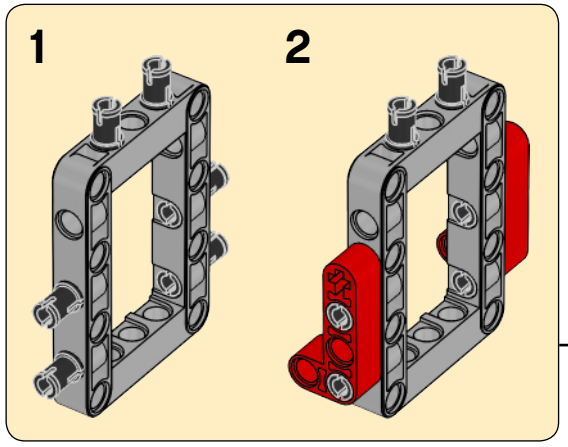

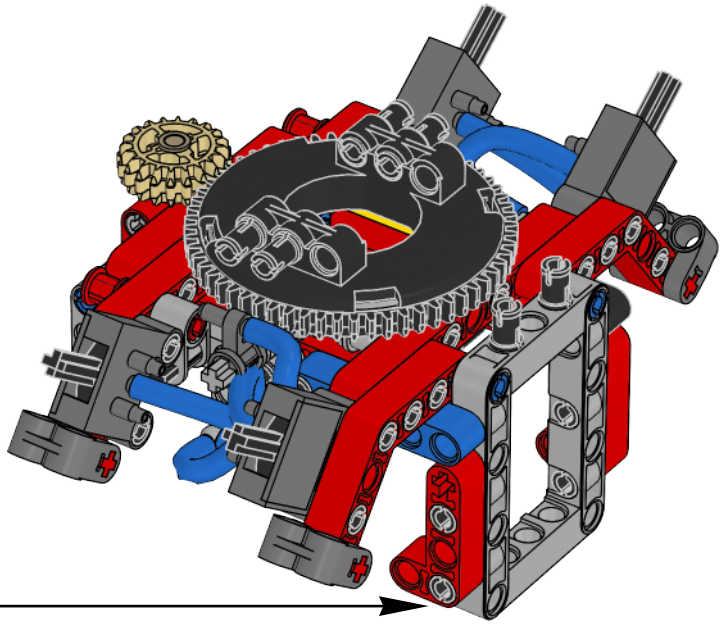

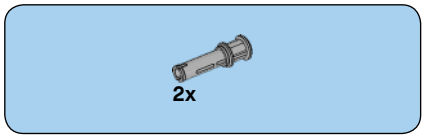

21

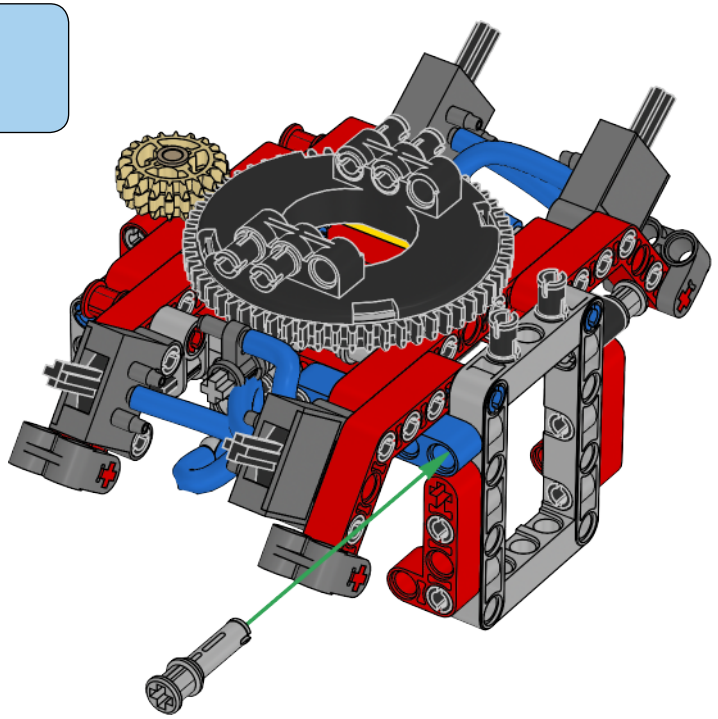

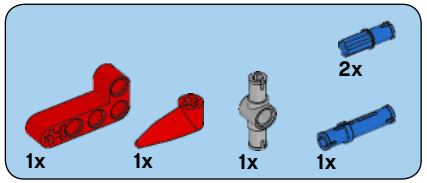

22

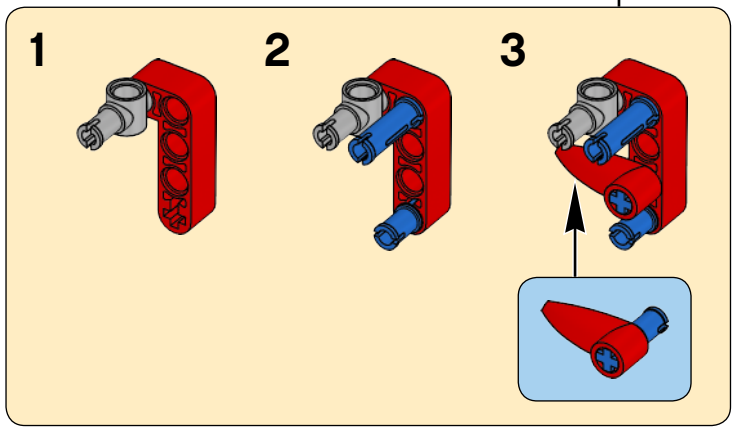

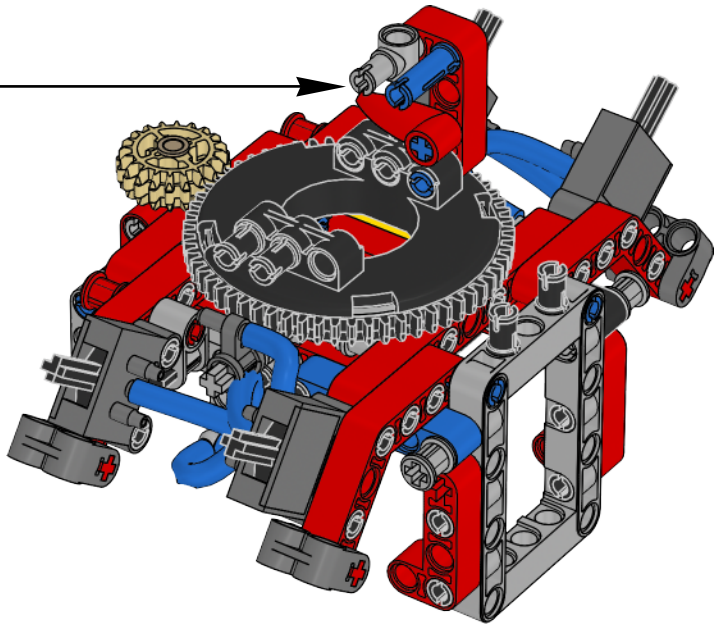

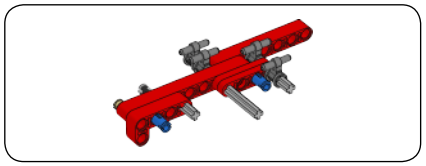

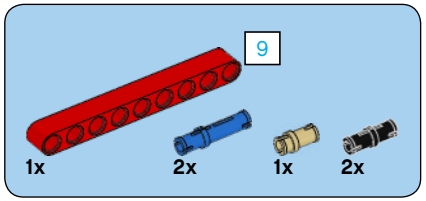

1

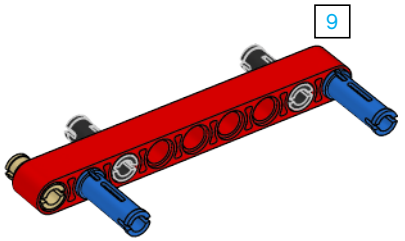

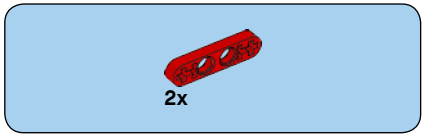

2

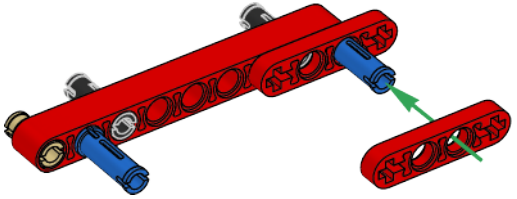

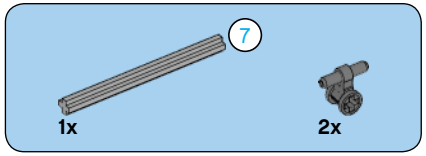

3

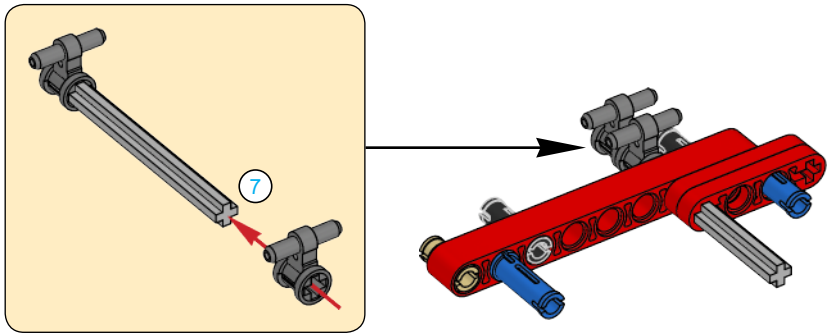

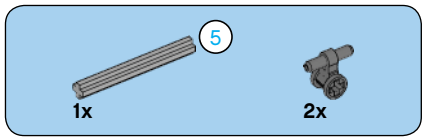

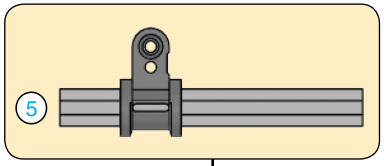

4

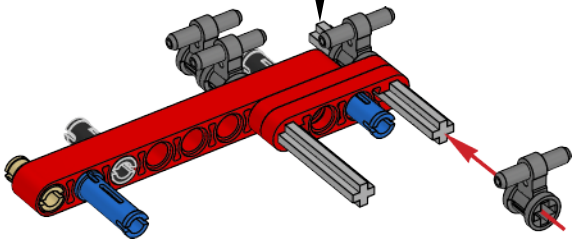

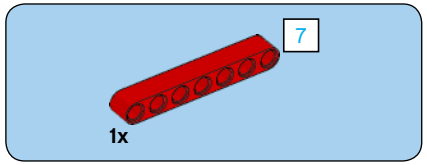

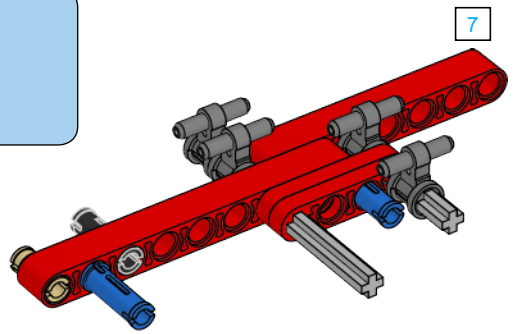

5

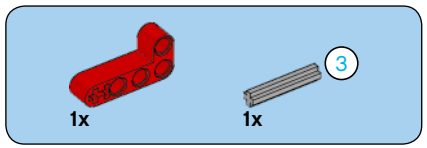

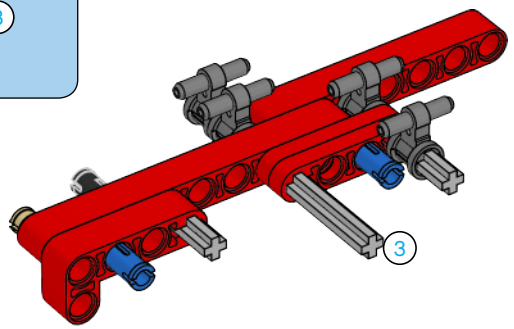

6

23

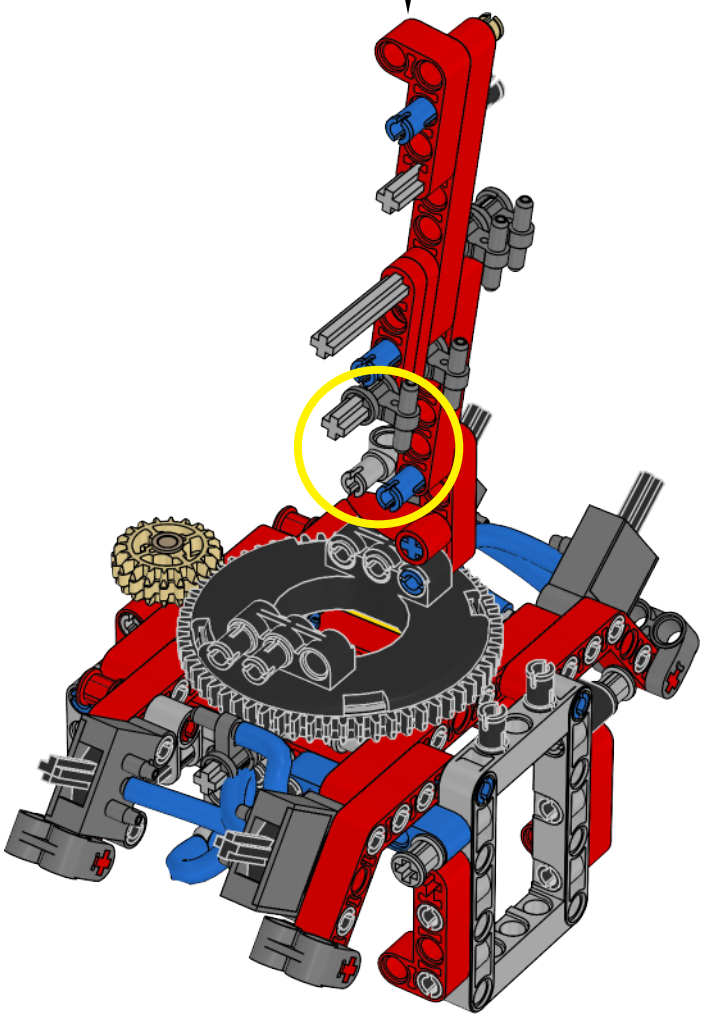

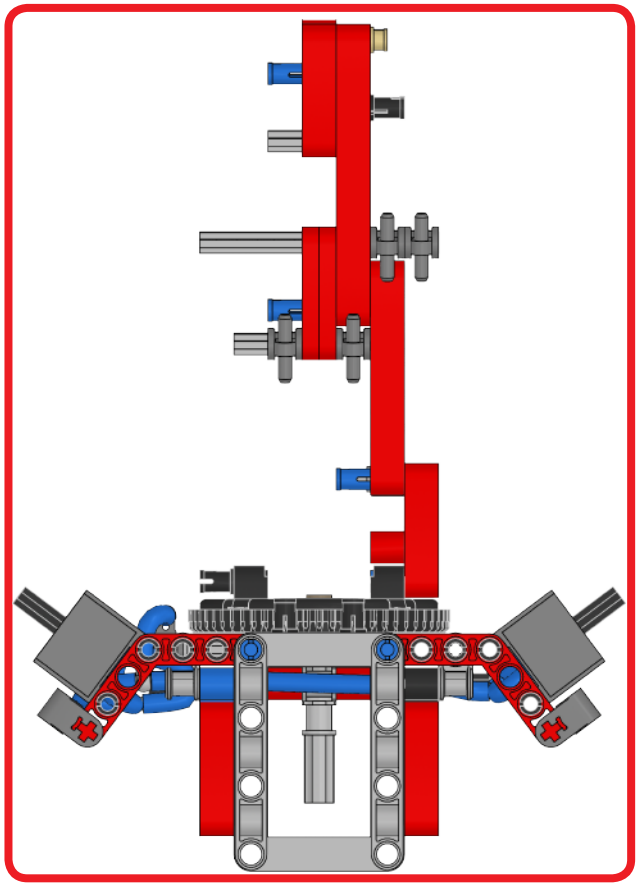



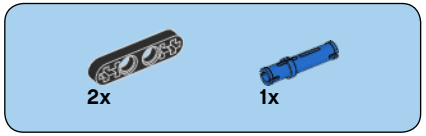

1

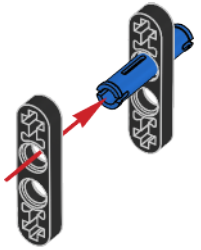

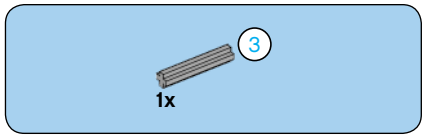

2

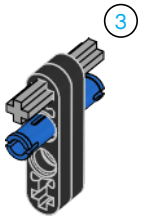

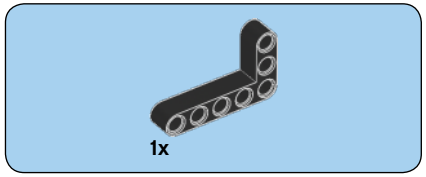

3

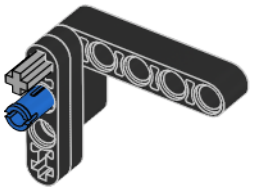

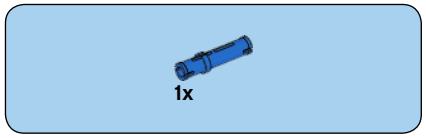

4

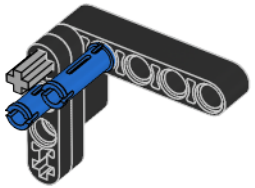

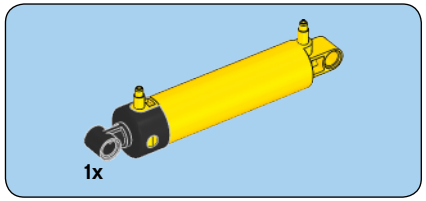

5

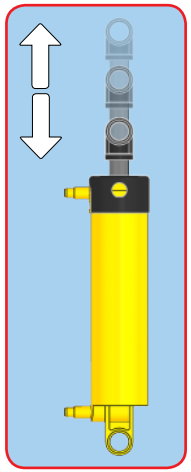

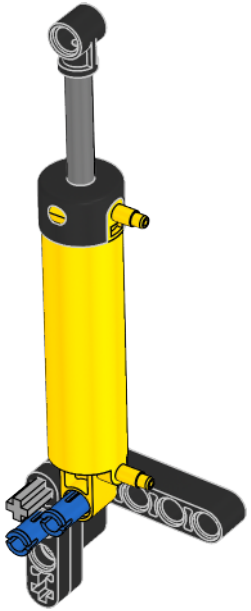

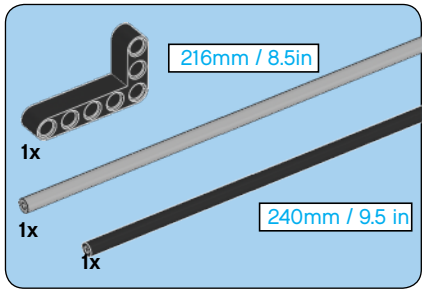
216mm / 8.5in
1x
240mm / 9.5 in
1x
1x

6

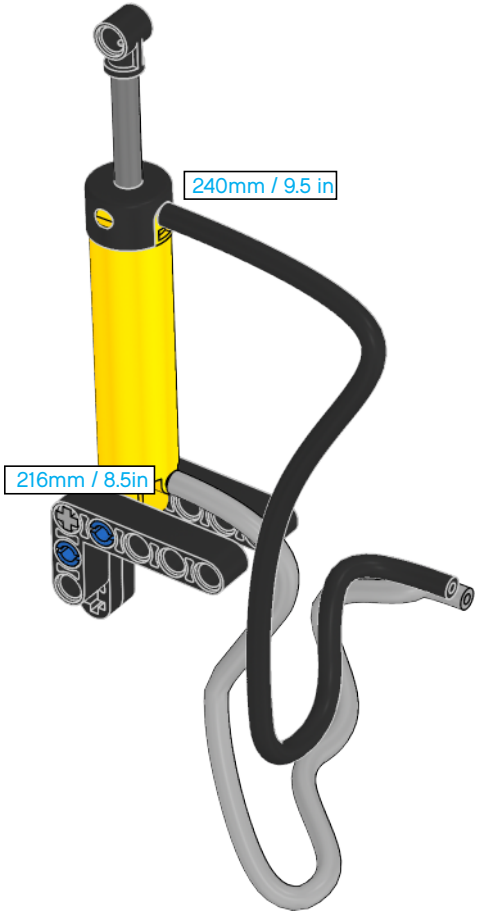
240mm / 9.5 in
216mm / 8.5in


216mm / 8.5in
216mm / 8.5in
240mm / 9.5in
240mm / 9.5in
296mm / 11.7in
296mm / 11.7in

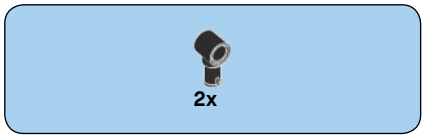

7

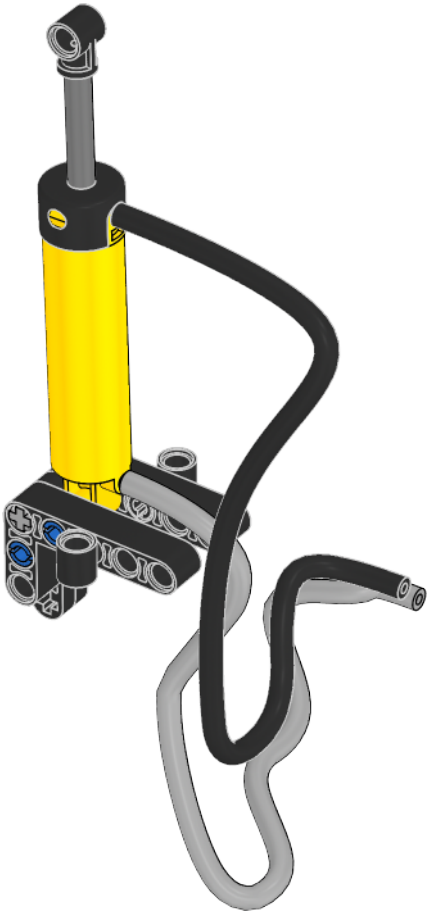

24

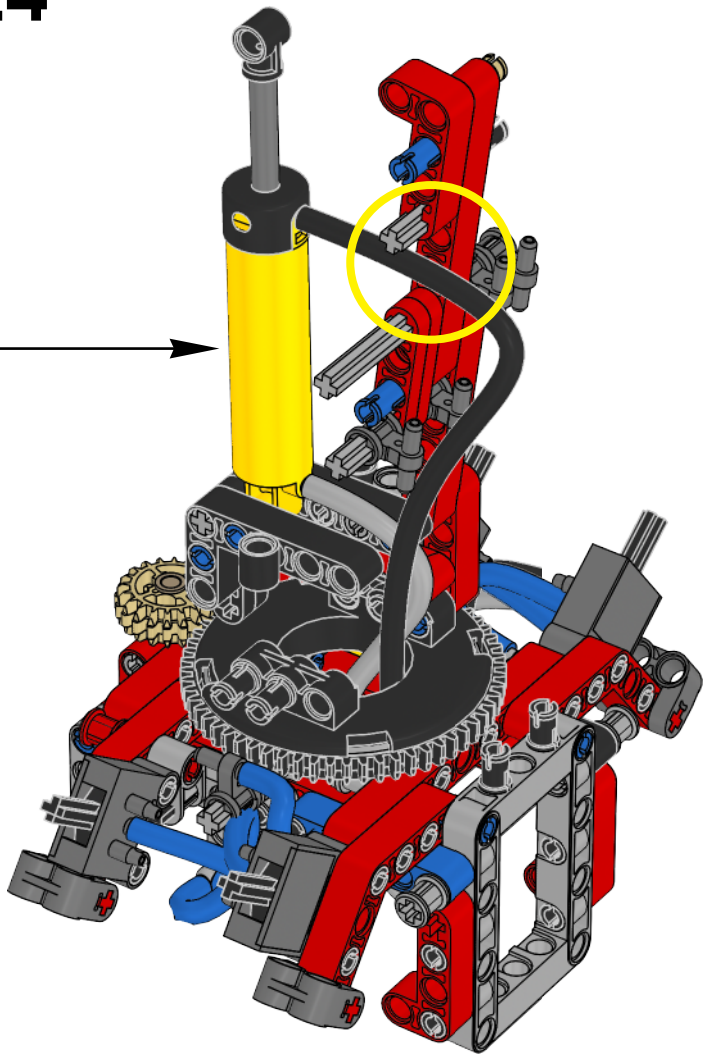

25

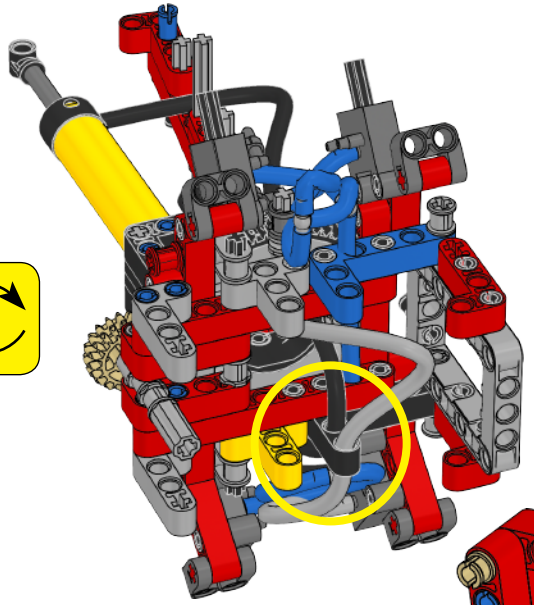

26

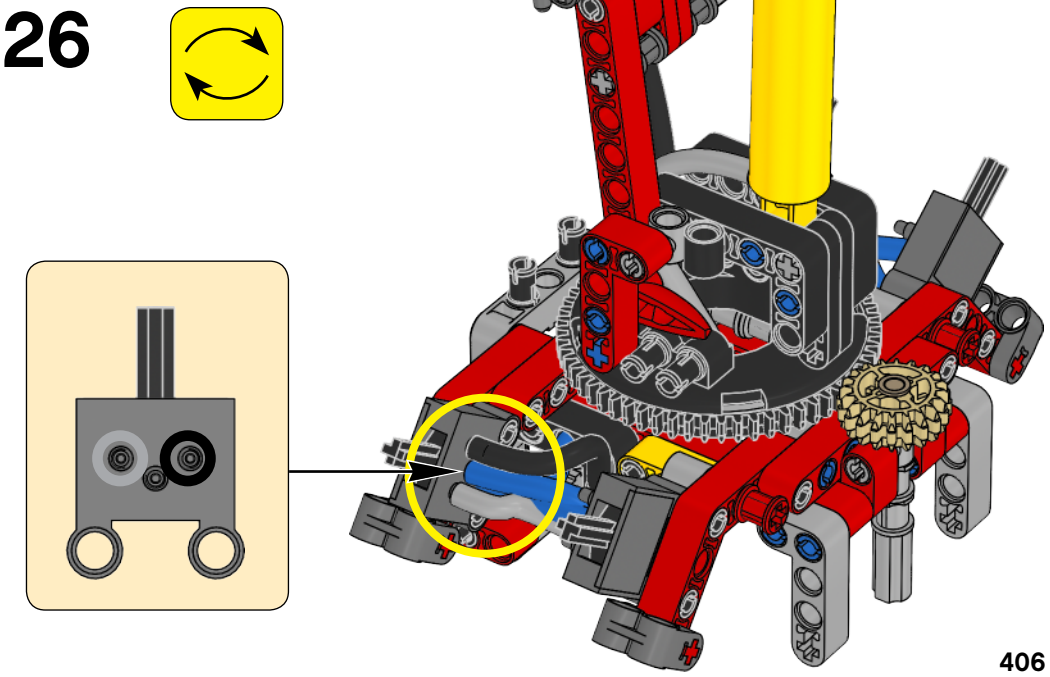

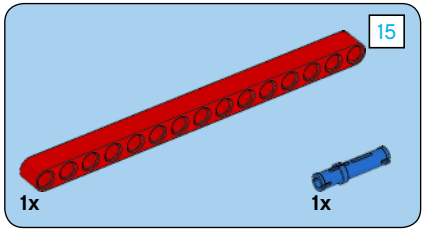

27

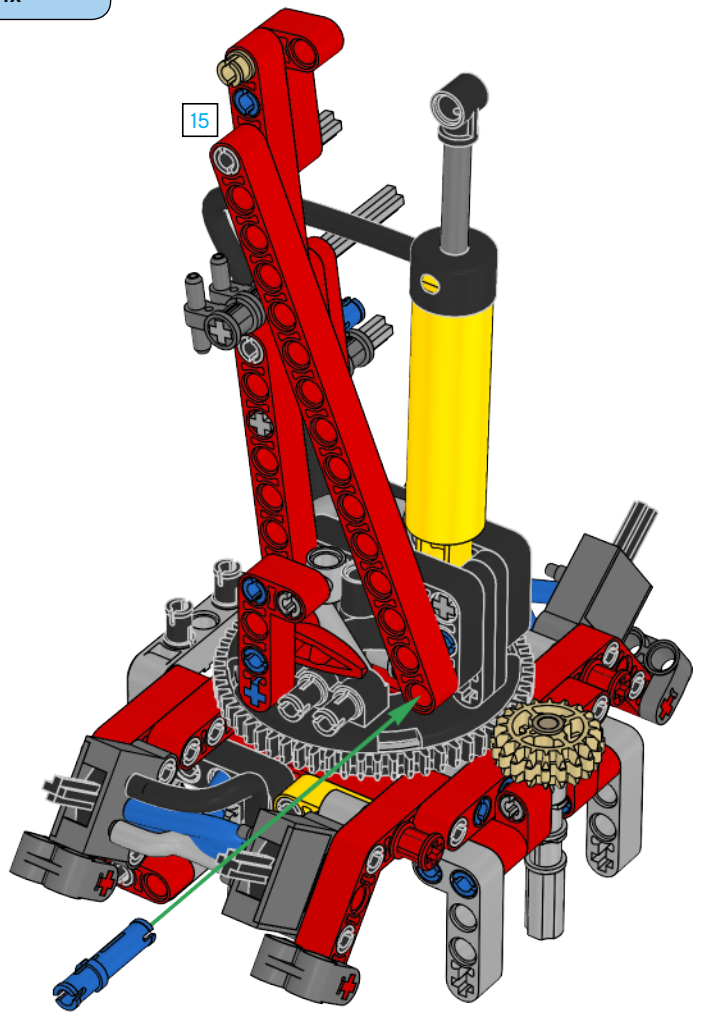

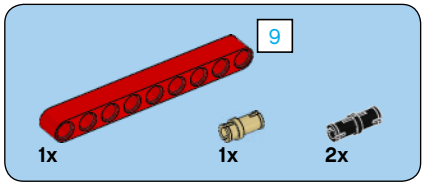

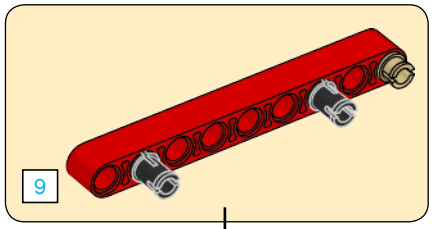

28

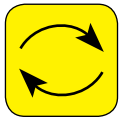

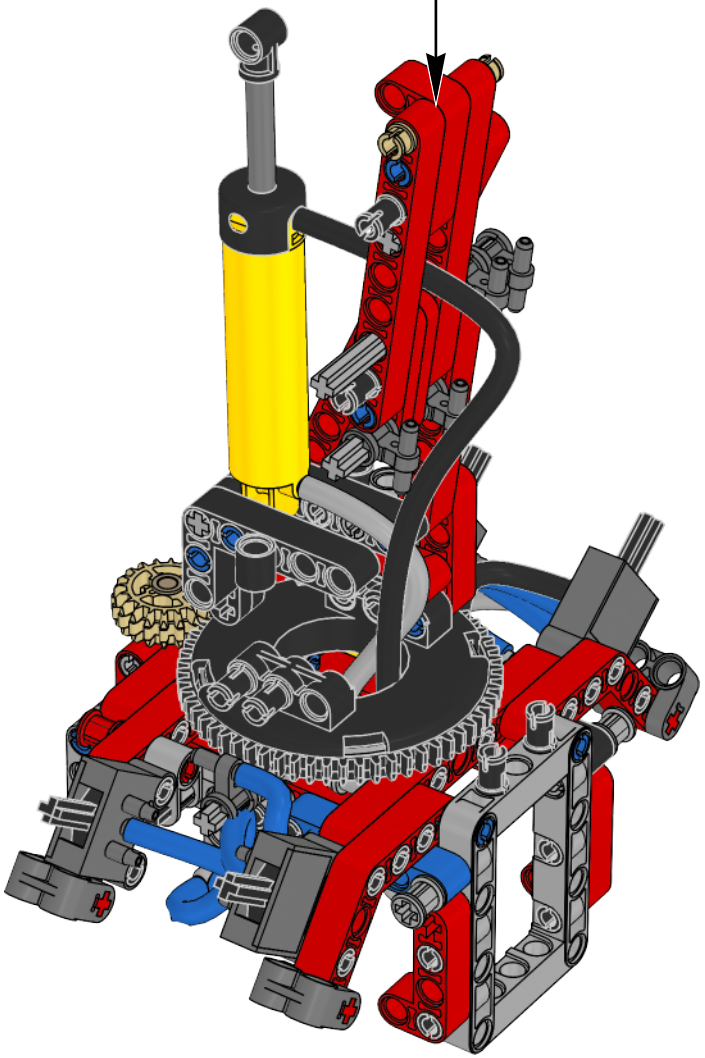

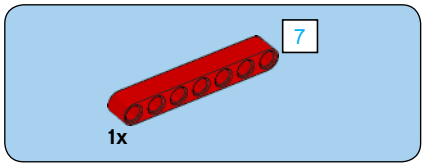

29

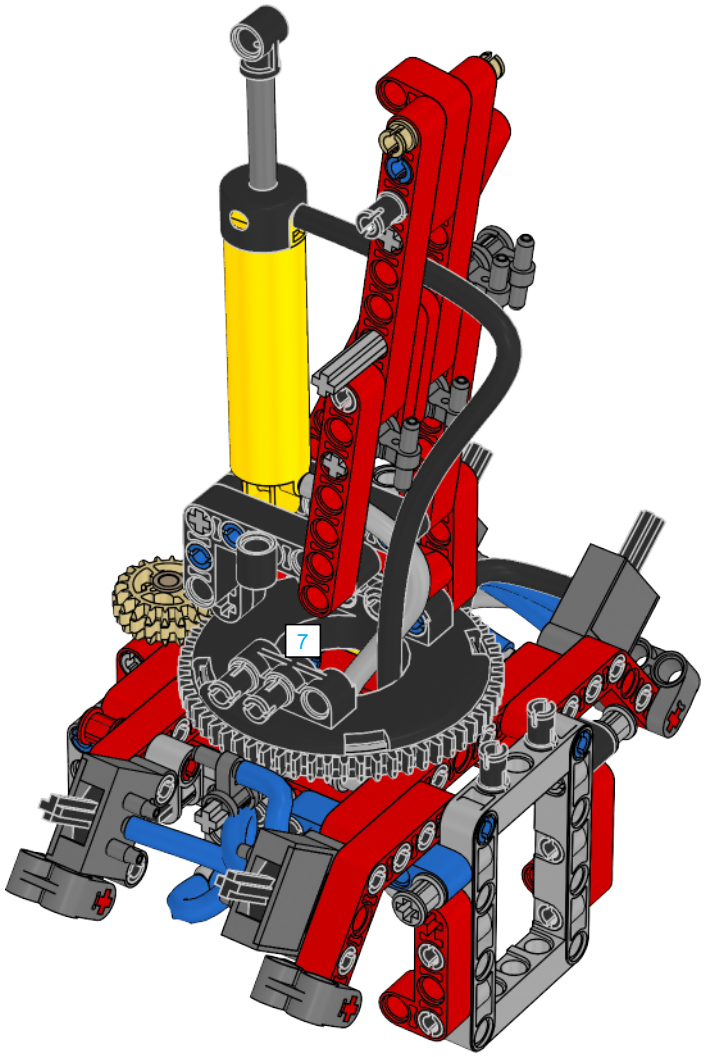



2x

30

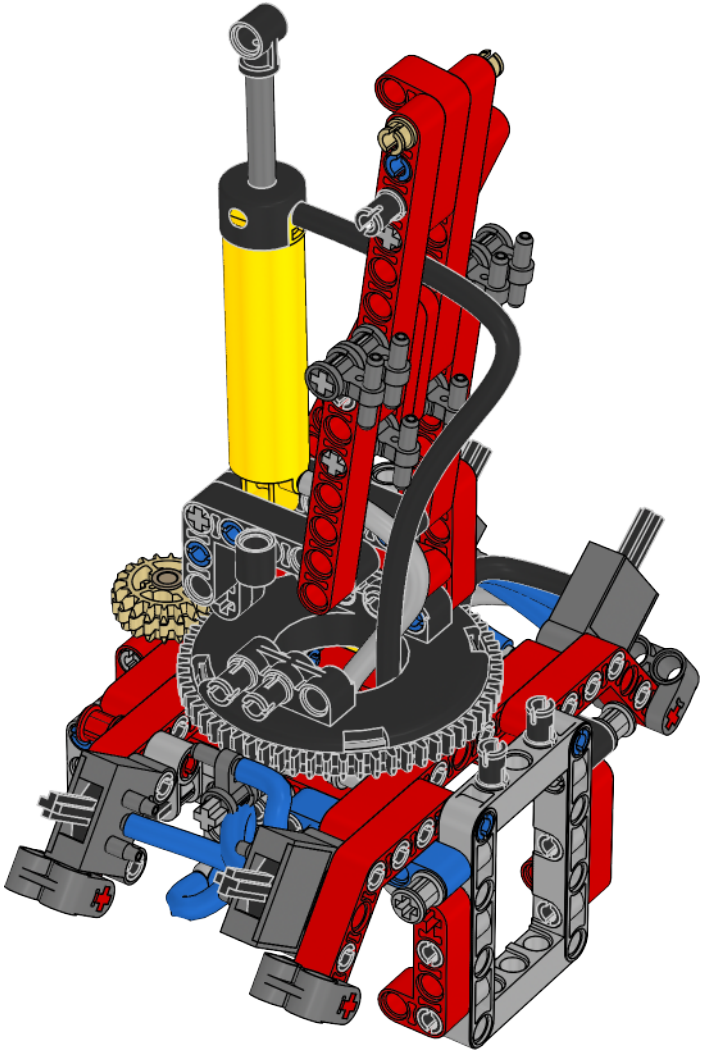

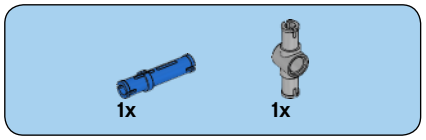

31

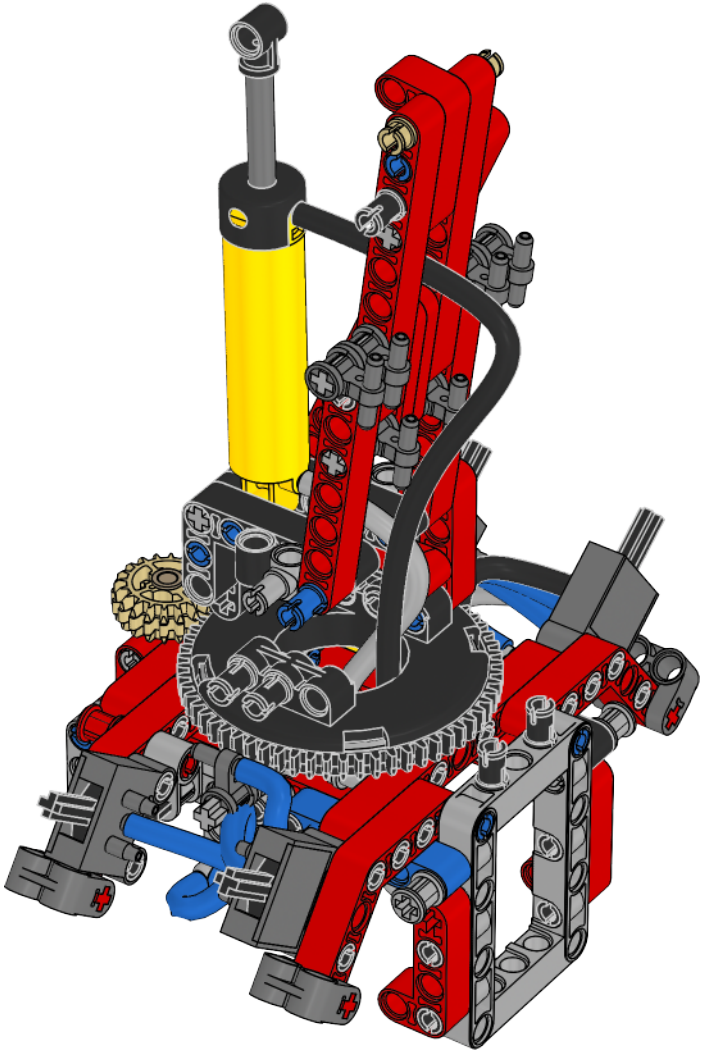

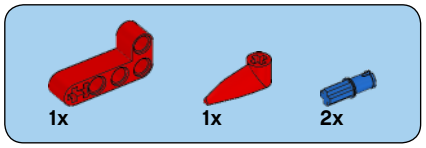

32

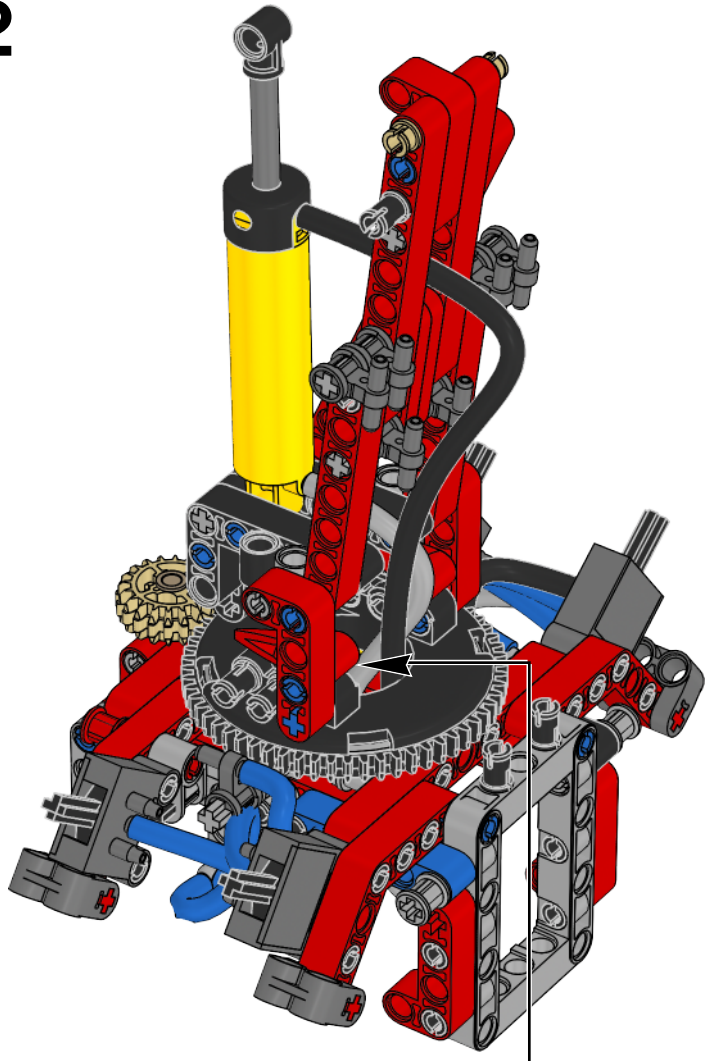

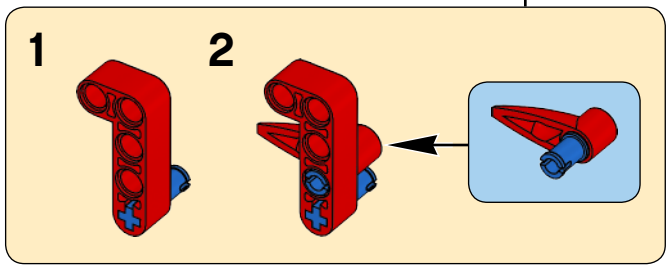

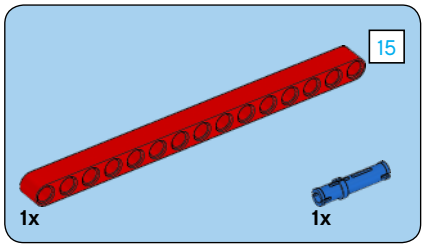

33

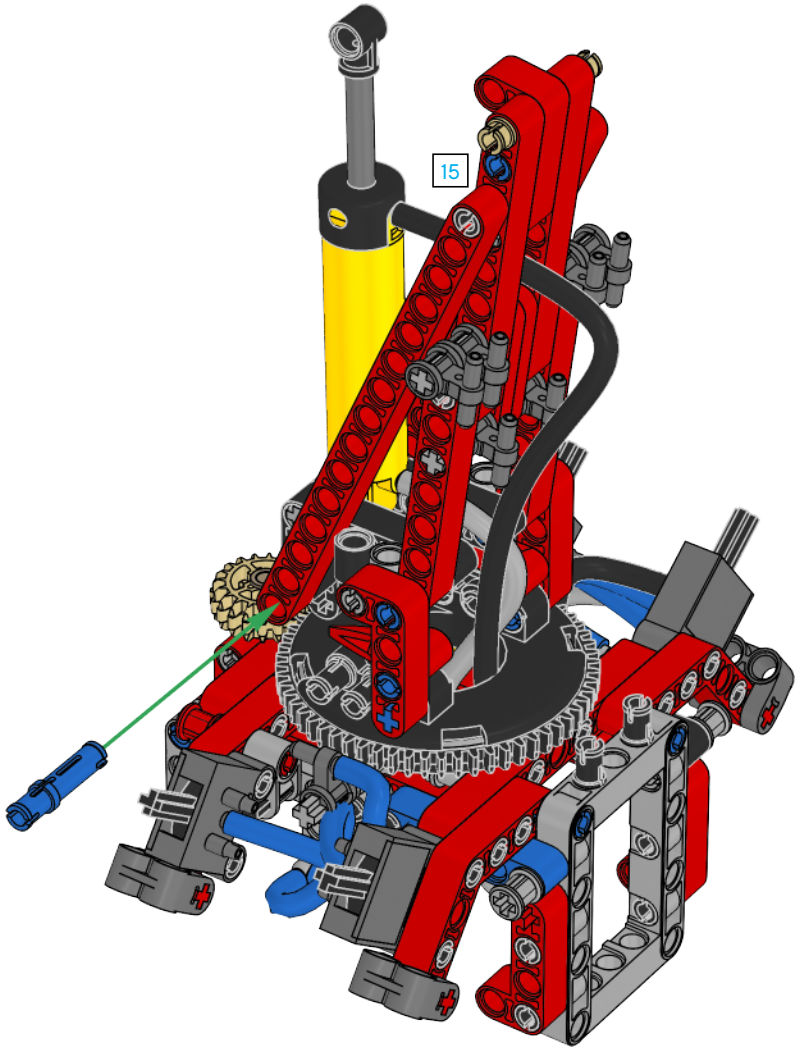

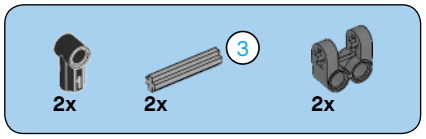

34

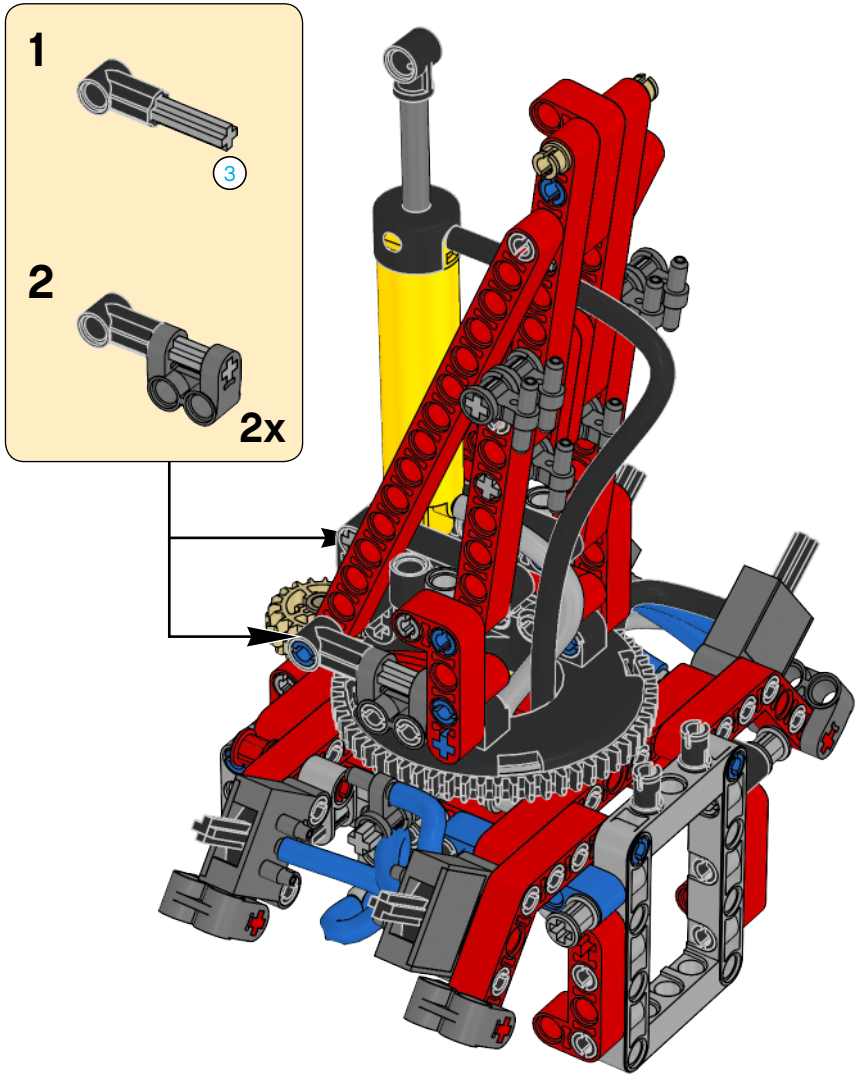

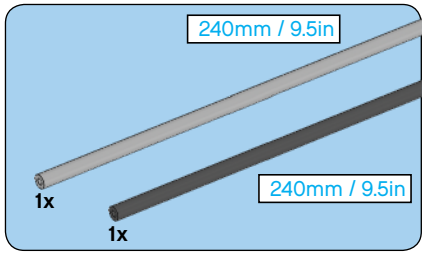
240mm / 9.5in
1x
240mm / 9.5in
1x

35

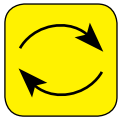

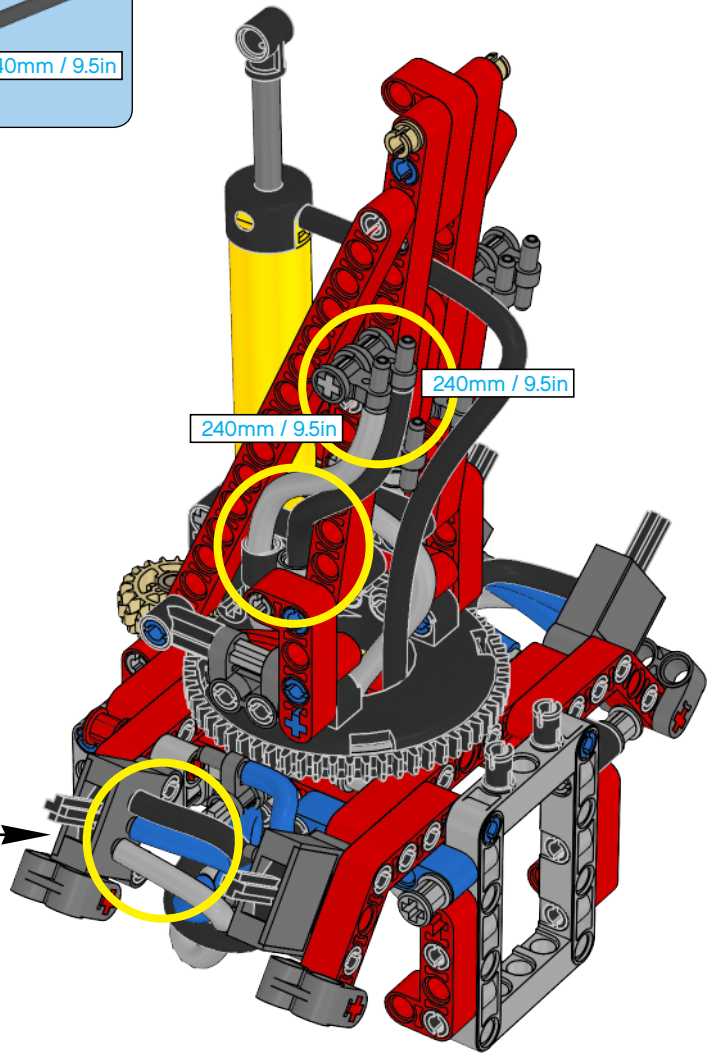
240mm / 9.5in
240mm / 9.5in

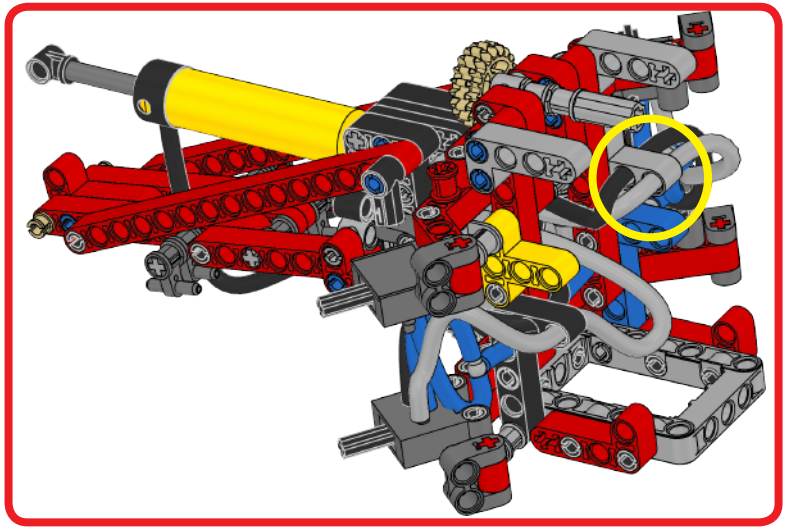

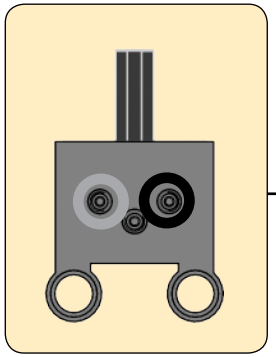


216mm / 8.5in
216mm / 8.5in
240mm / 9.5in
240mm / 9.5in
296mm / 11.7in
296mm / 11.7in

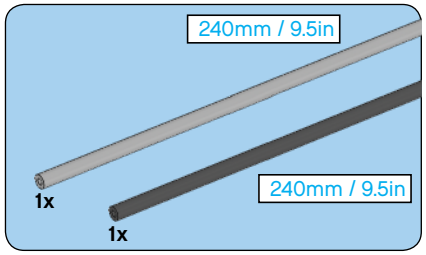
240mm / 9.5in
1x
240mm / 9.5in
1x

36

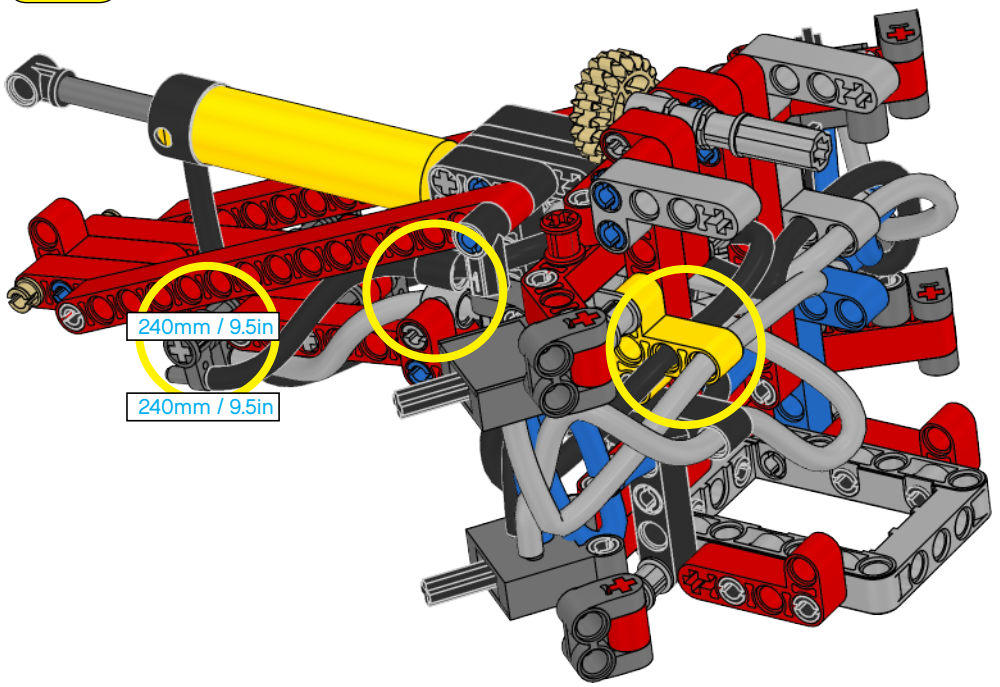
240mm / 9.5in
240mm / 9.5in


216mm / 8.5in
216mm / 8.5in
240mm / 9.5in
240mm / 9.5in
296mm / 11.7in
296mm / 11.7in

37

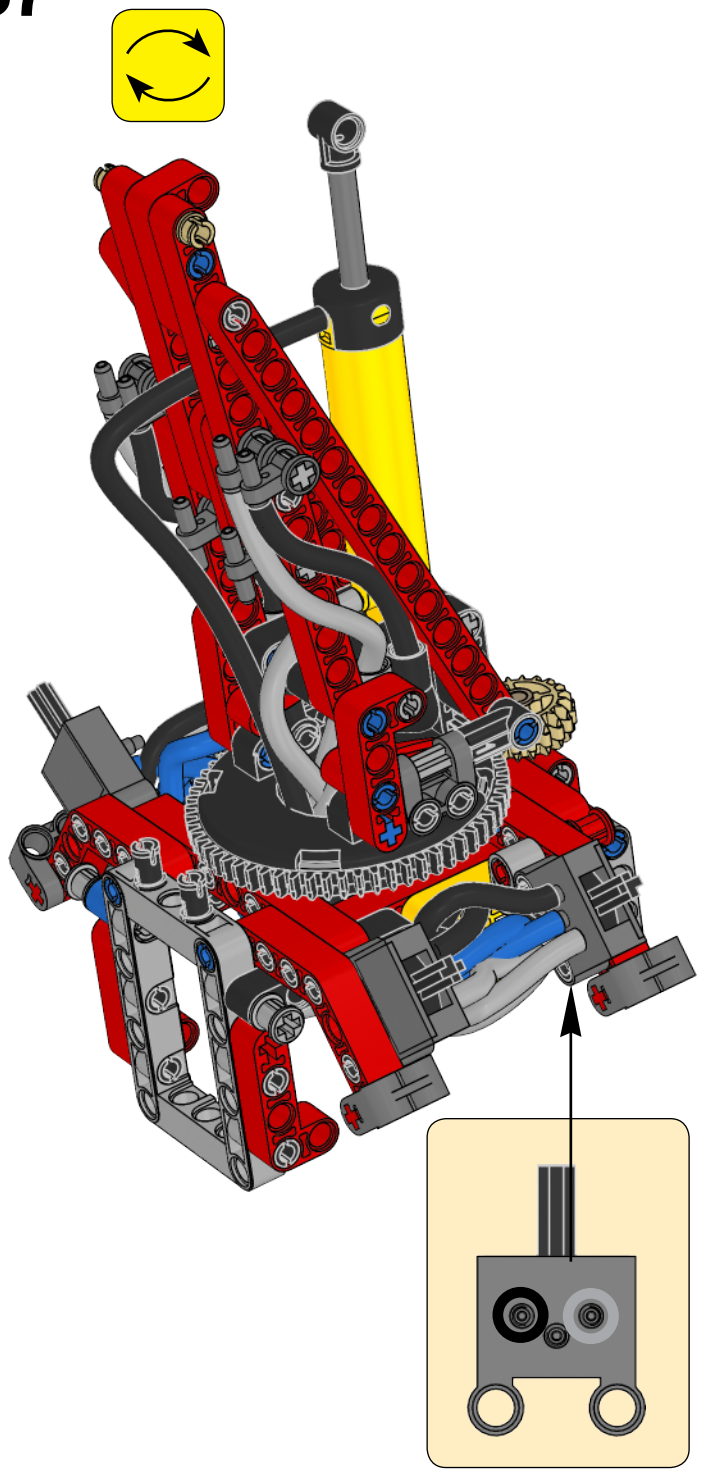

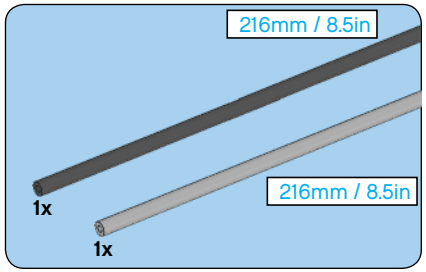
216mm / 8.5in
1x
216mm / 8.5in
1x

38

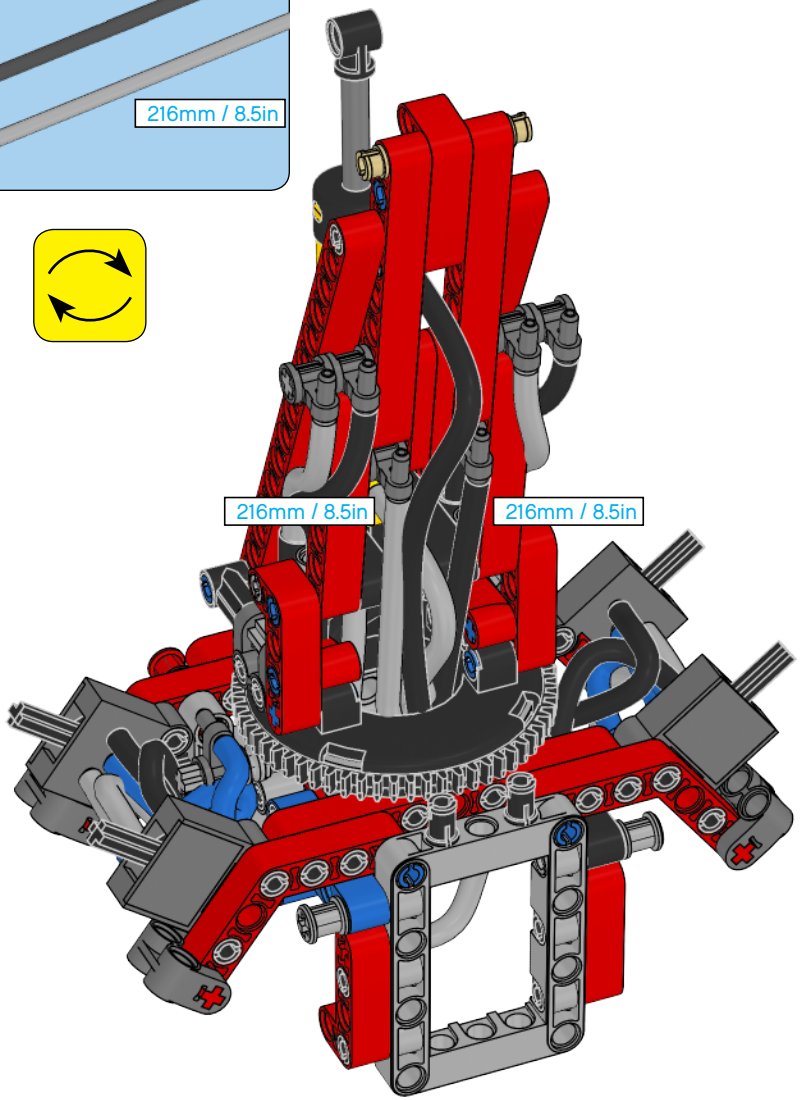
216mm / 8.5in
216mm / 8.5in


216mm / 8.5in
216mm / 8.5in
240mm / 9.5in
240mm / 9.5in
296mm / 11.7in
296mm / 11.7in

39

40

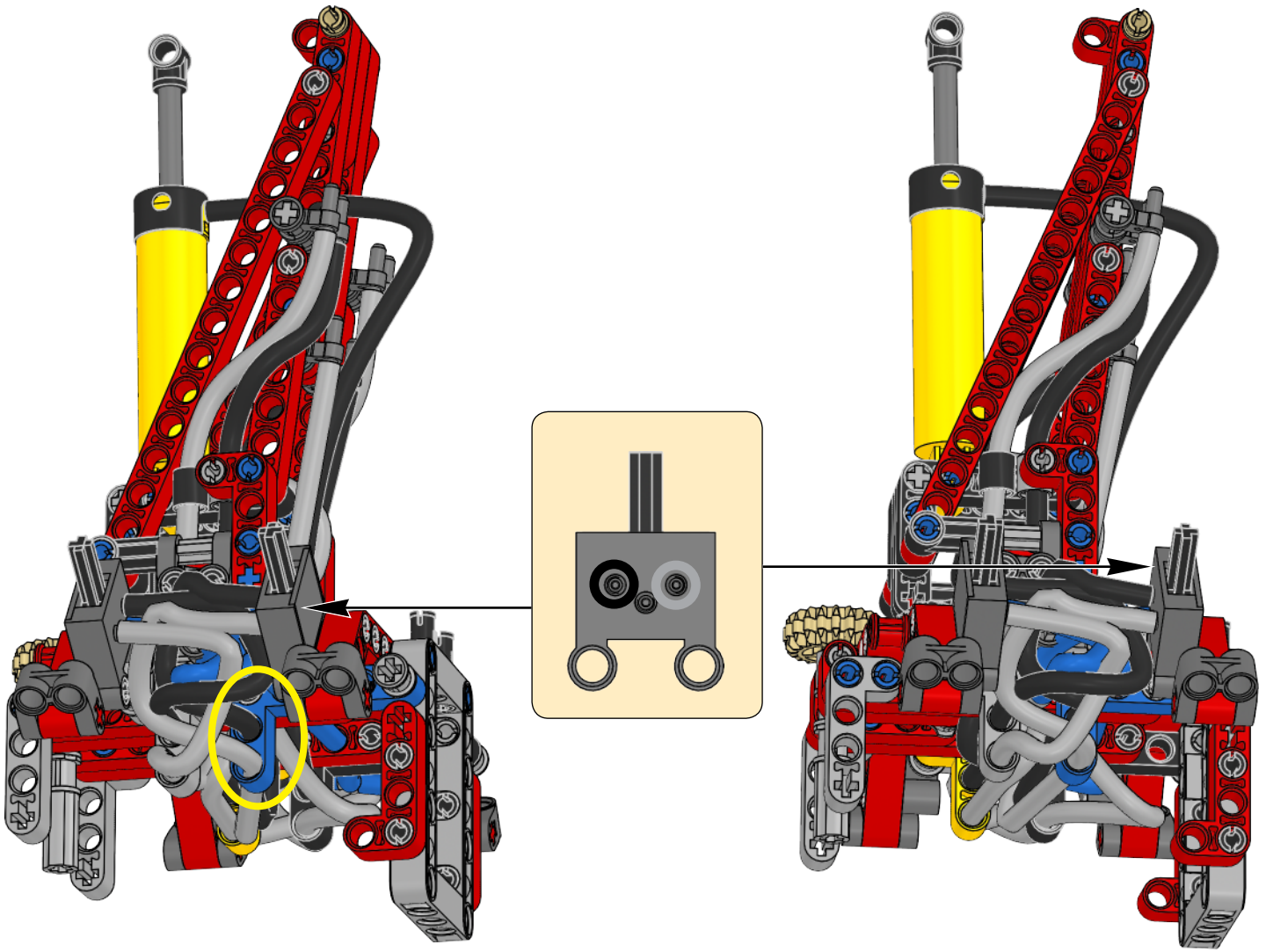

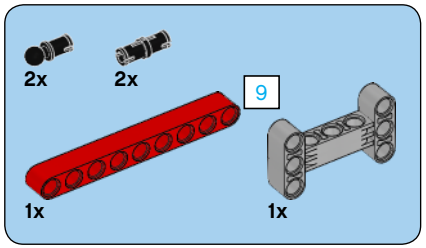

41

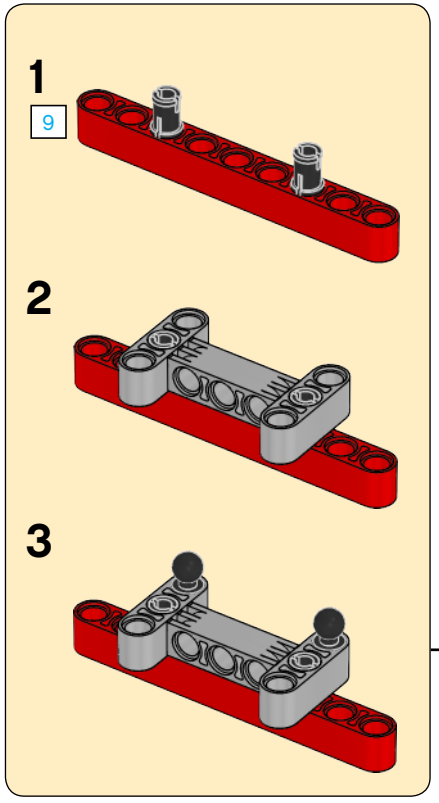

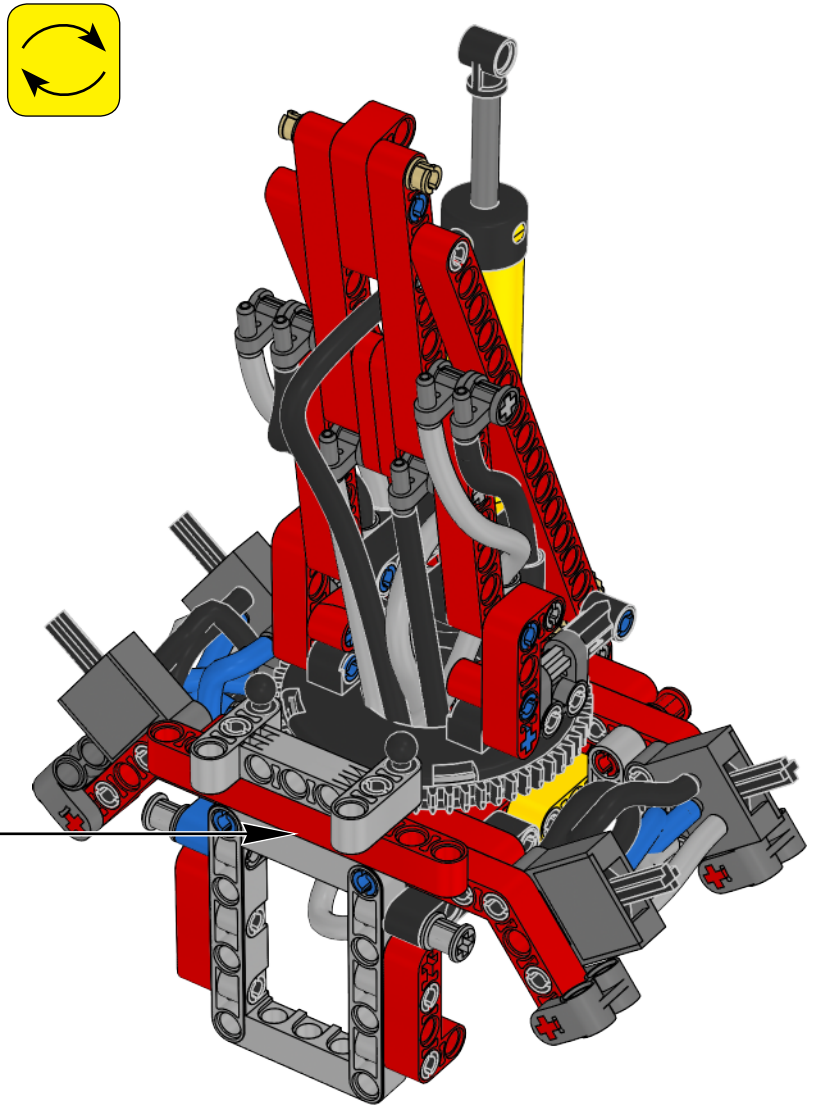

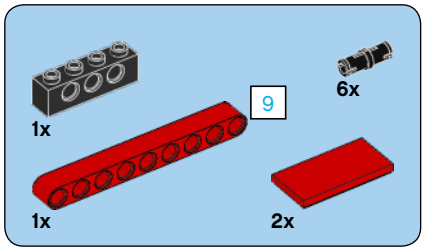

42

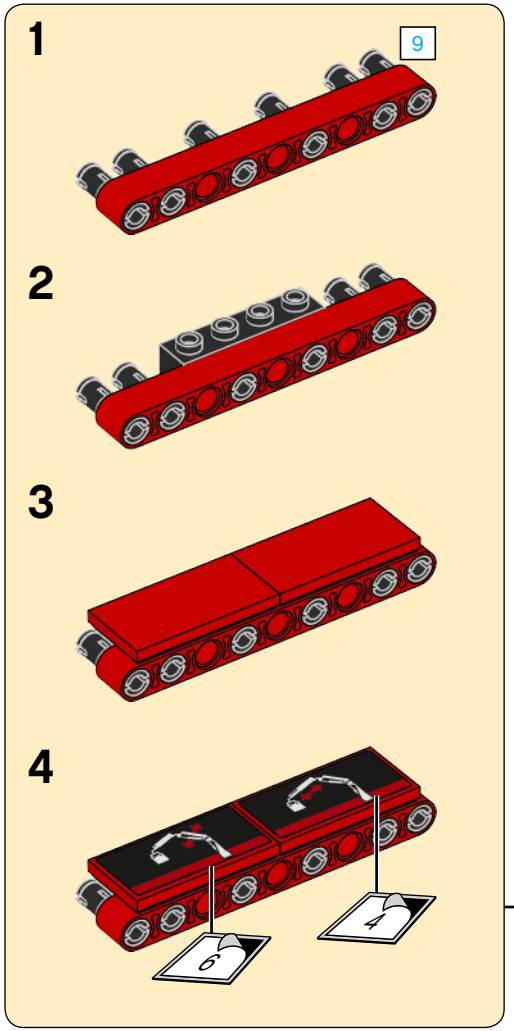

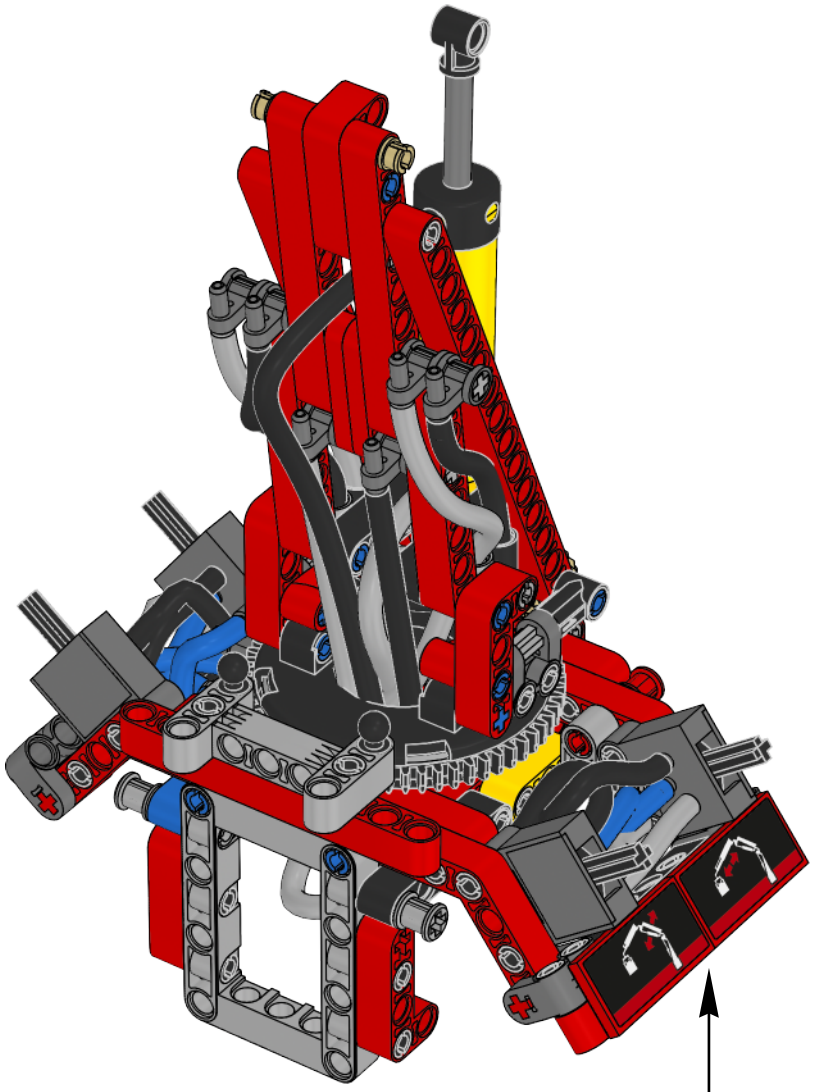

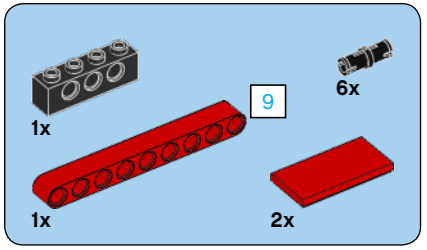

43

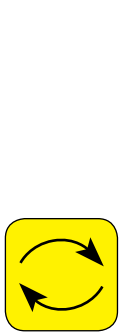

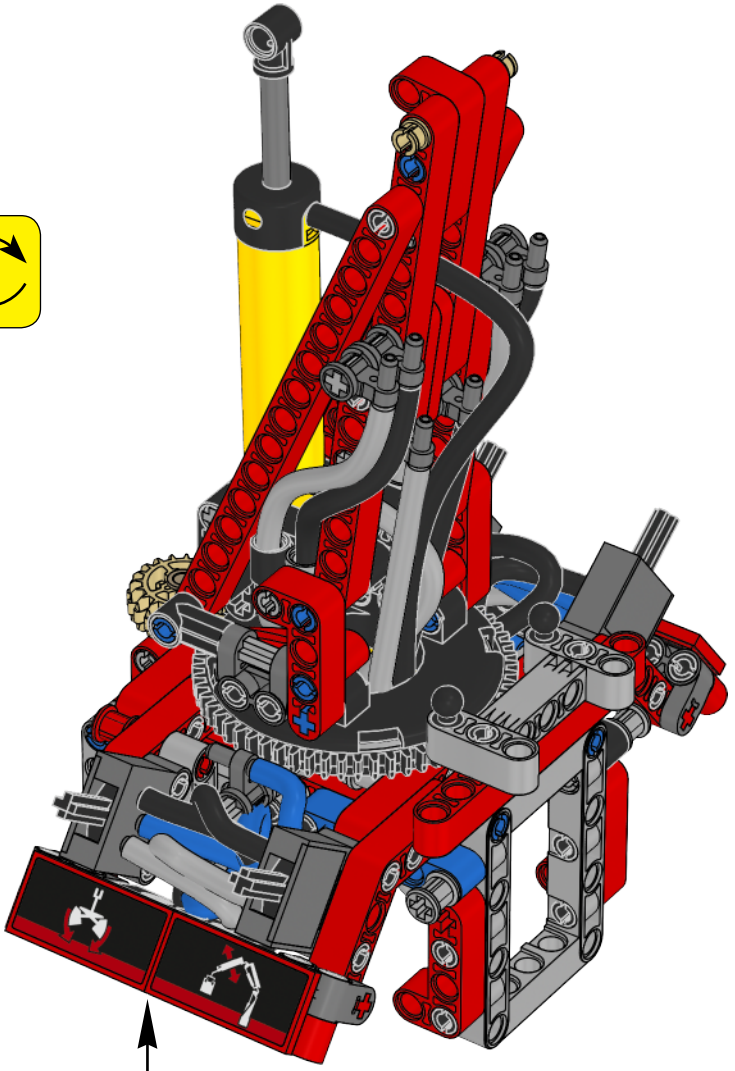

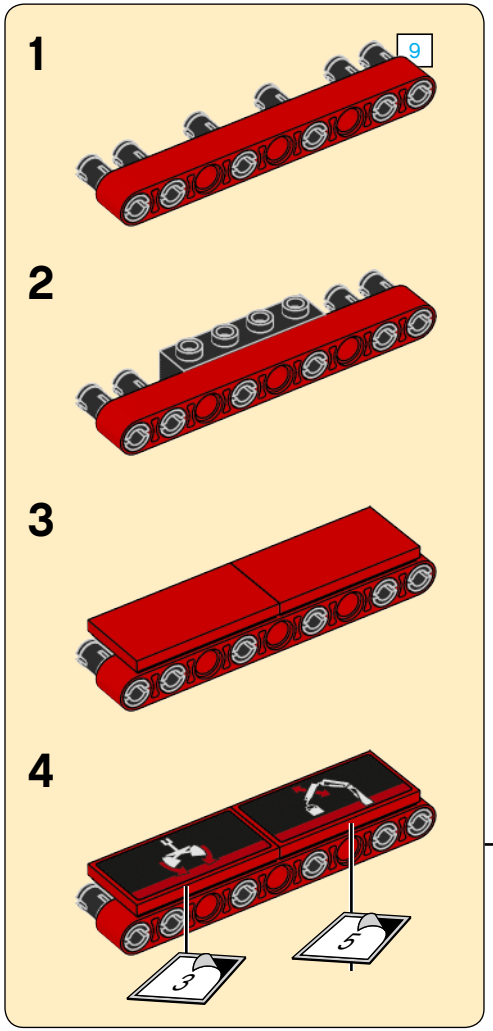

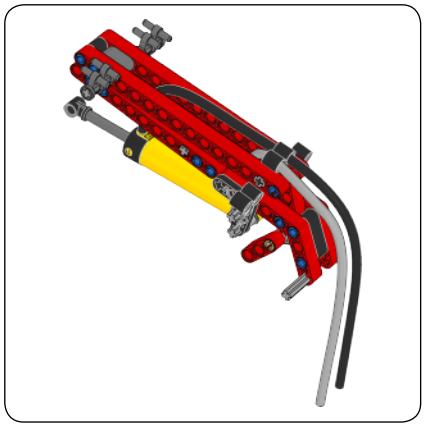

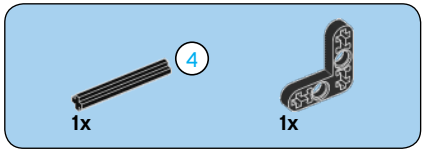

1



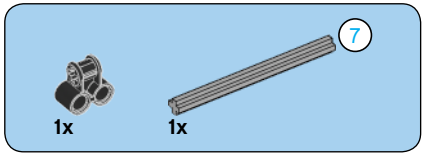

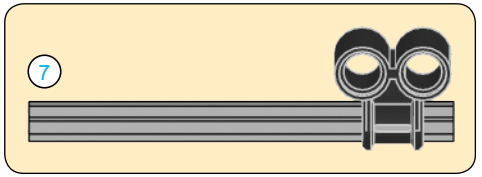

2

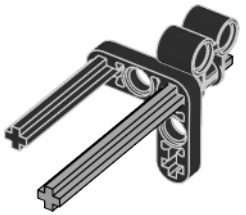

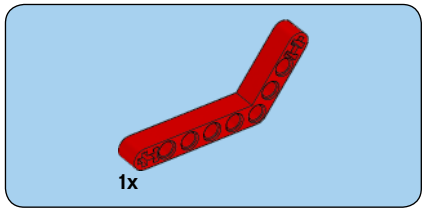

3

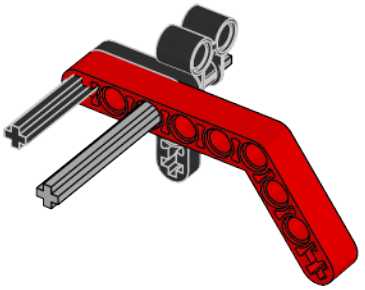

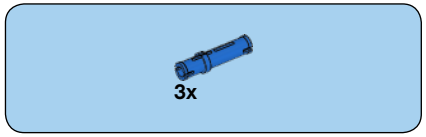

4

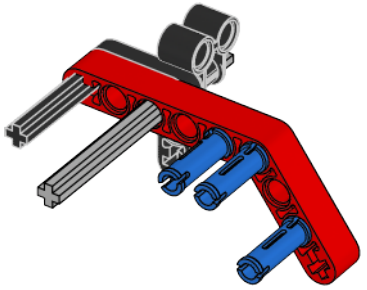

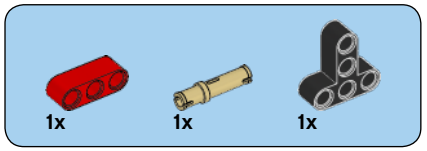

5

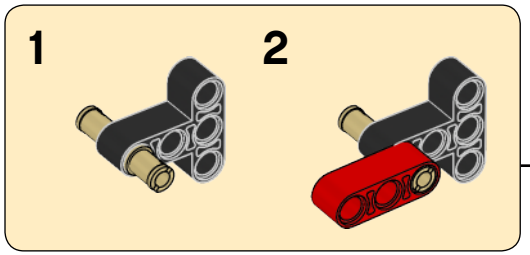

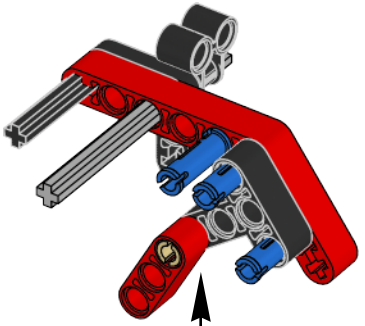

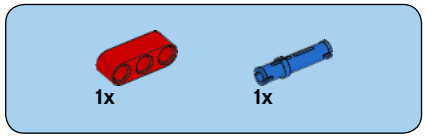

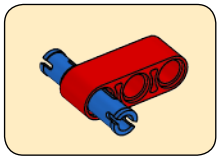

6

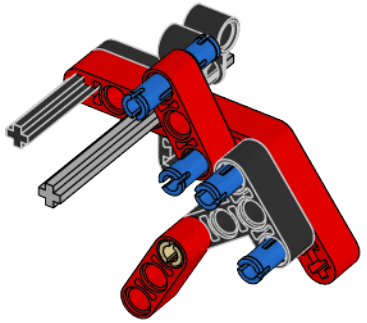

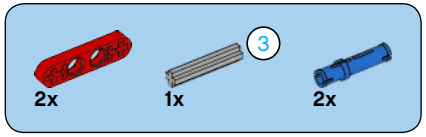

7

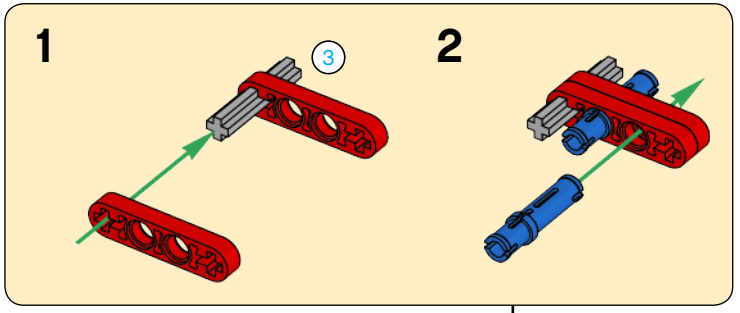

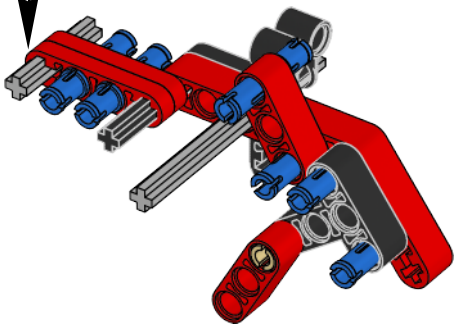

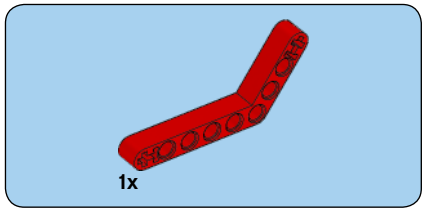

8

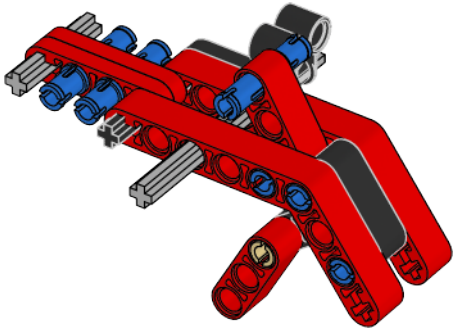

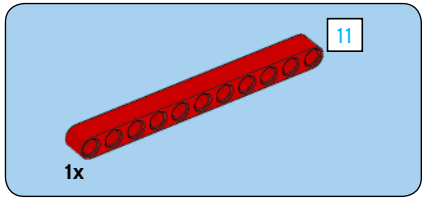

9

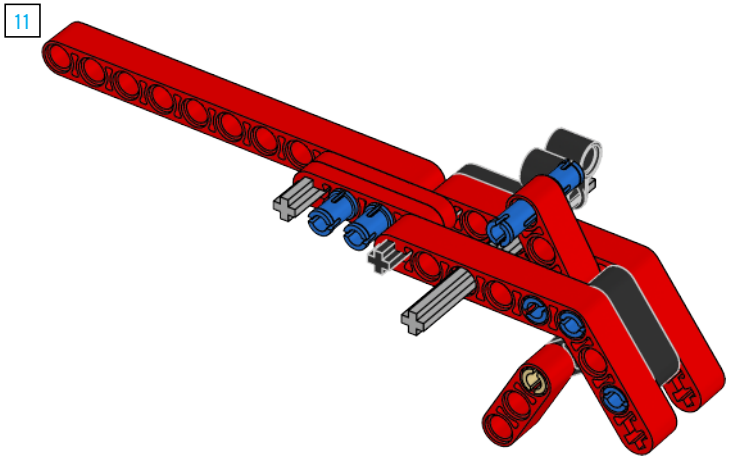



2x

10

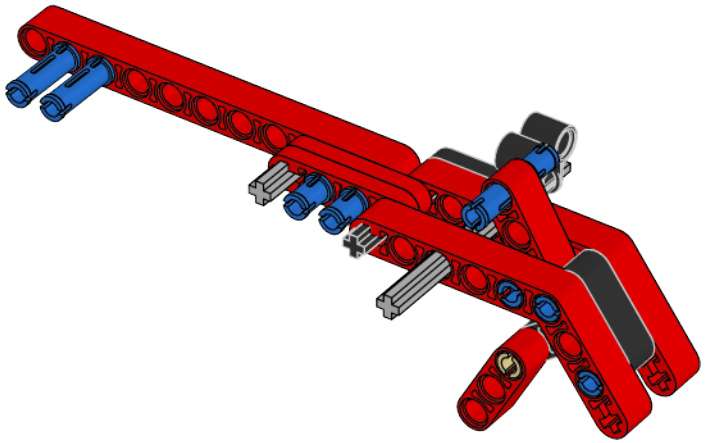



1x

11

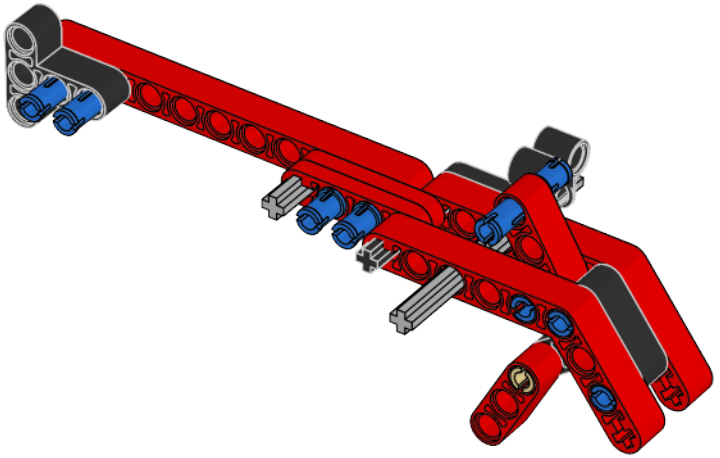

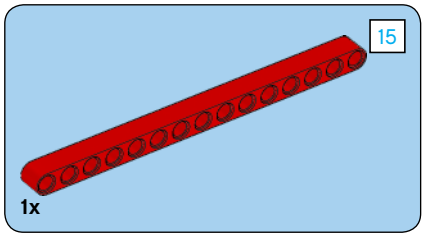

12

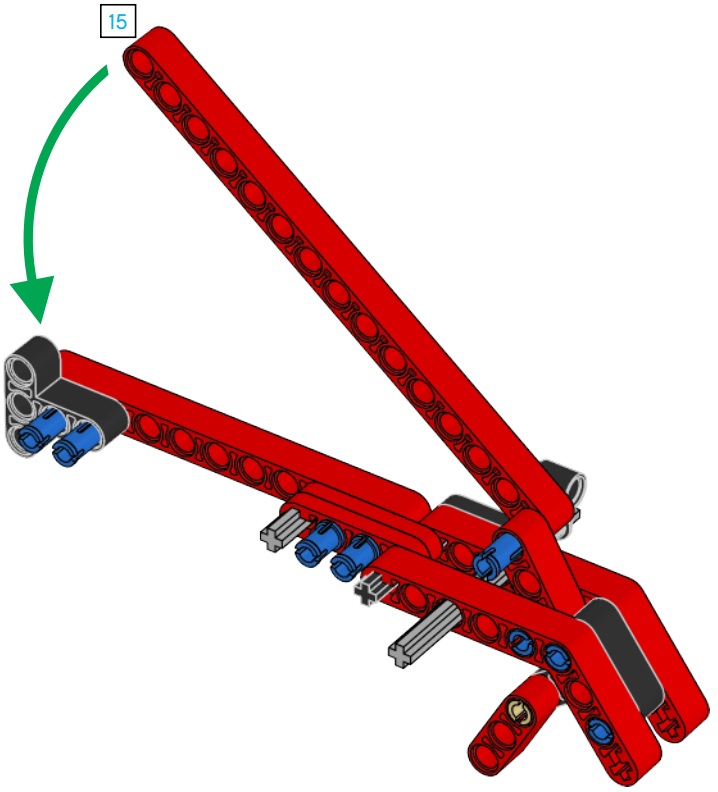

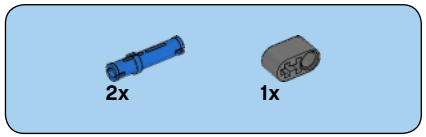

13

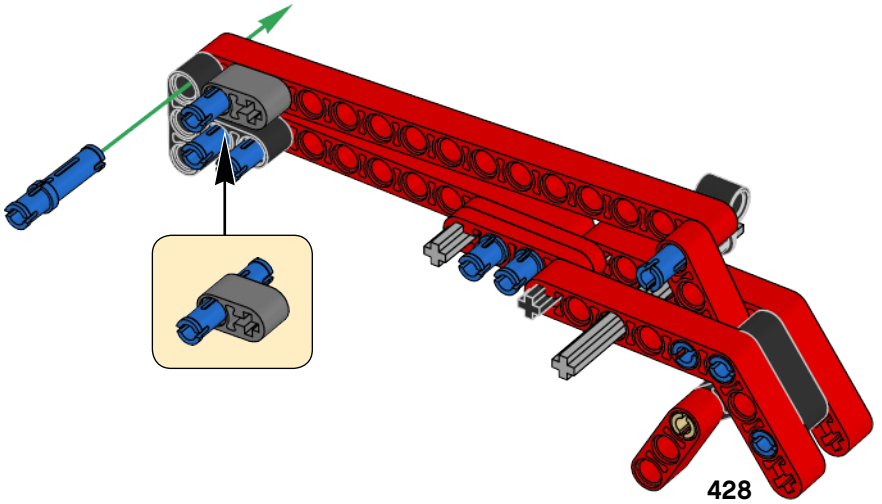

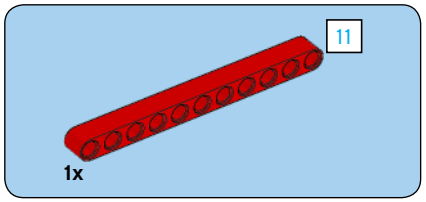

14

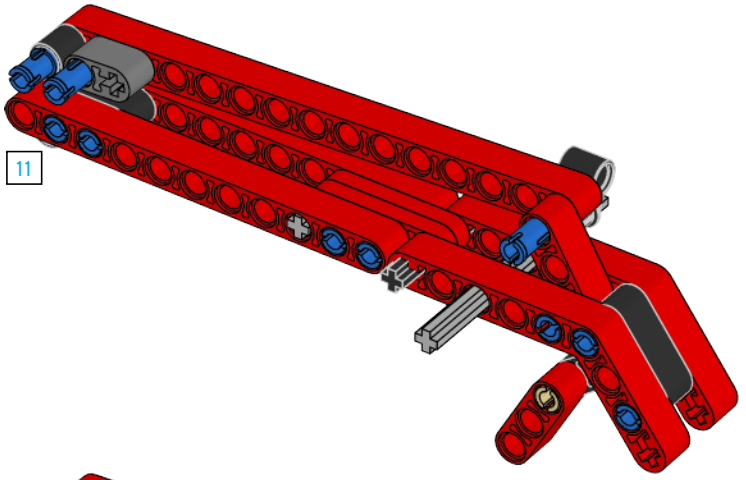

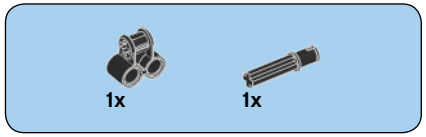

15

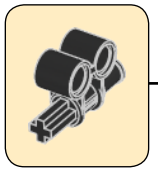

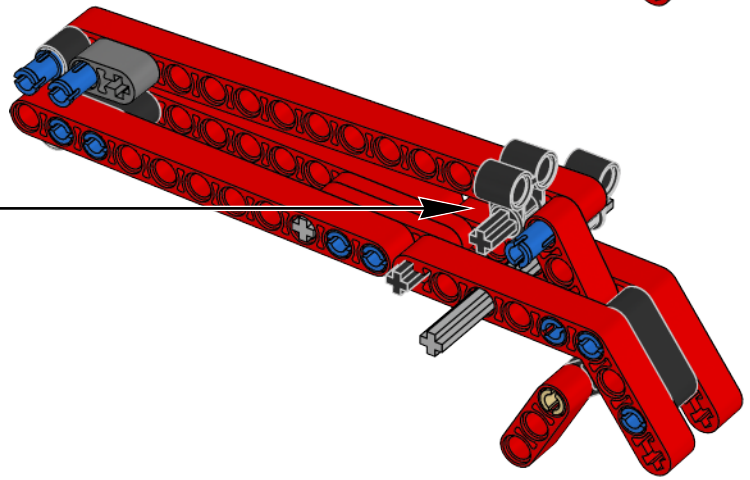

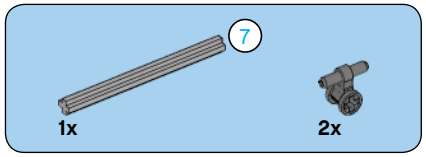

16

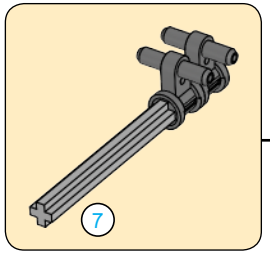

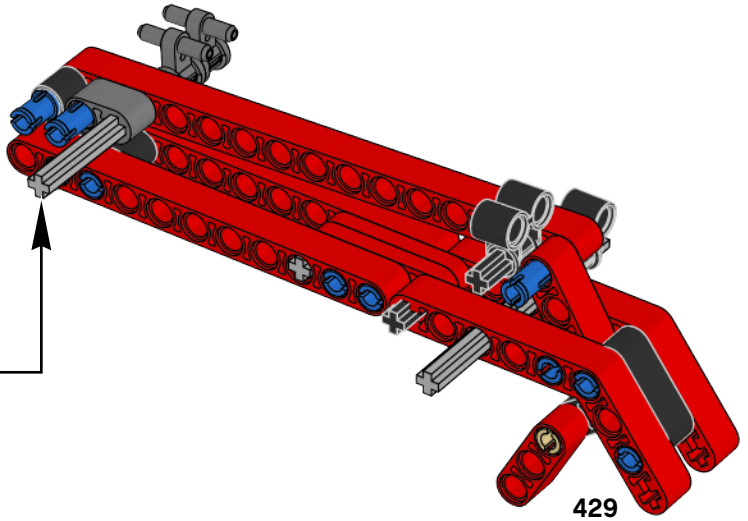

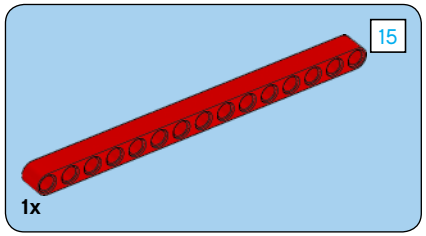

17

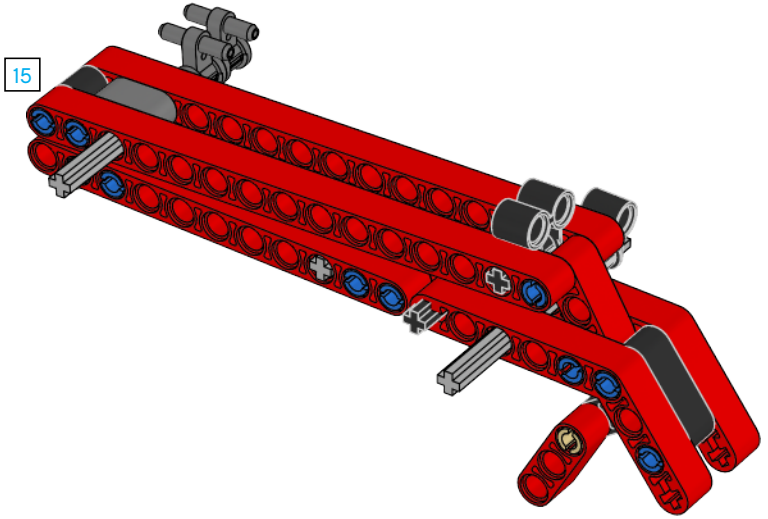

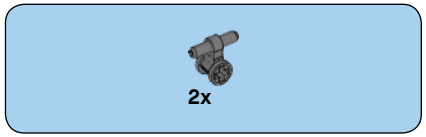

18

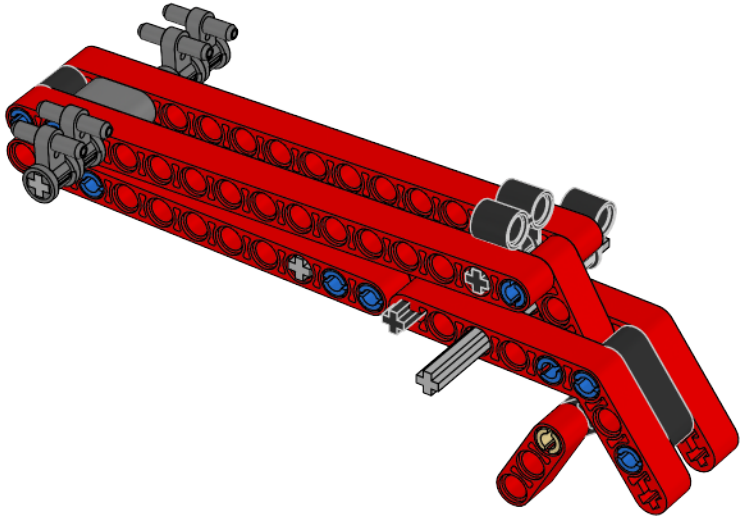

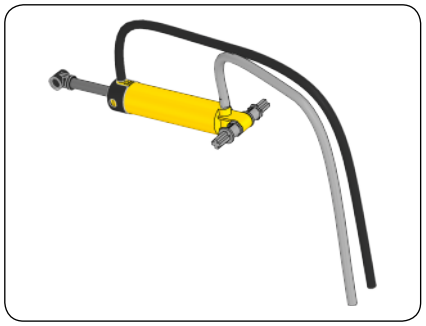

1

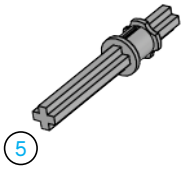
5

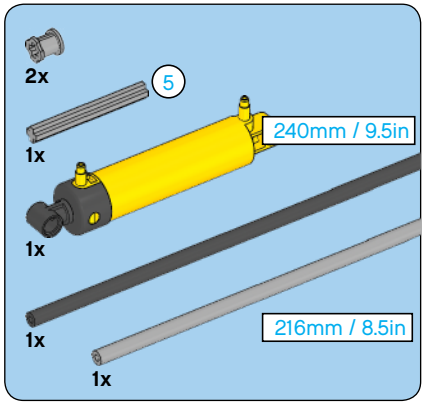
2x
5
240mm / 9.5in
1x
1x
216mm / 8.5in
1x
1x

19

2

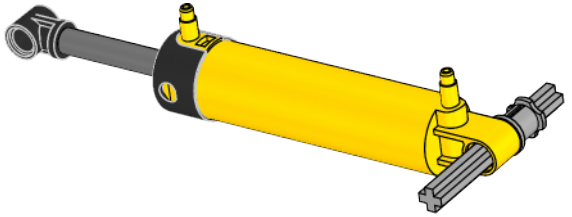

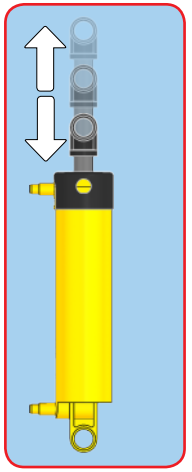


216mm / 8.5in
216mm / 8.5in
240mm / 9.5in
240mm / 9.5in
296mm / 11.7in
296mm / 11.7in

3

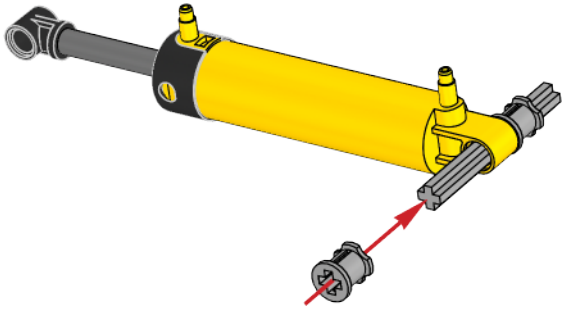

4

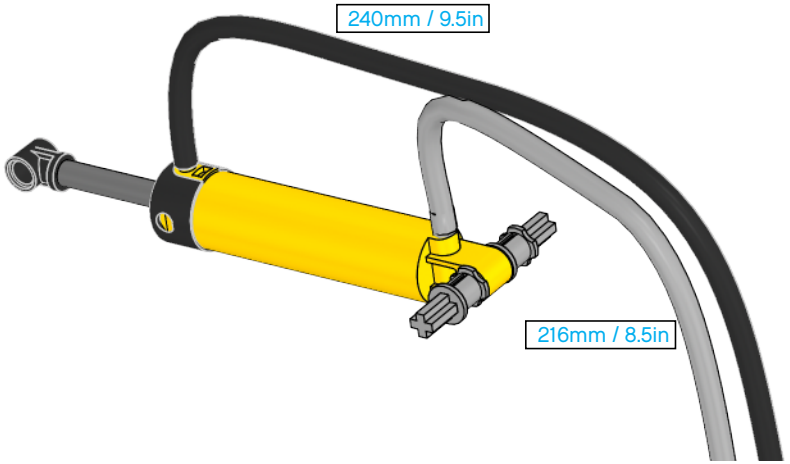

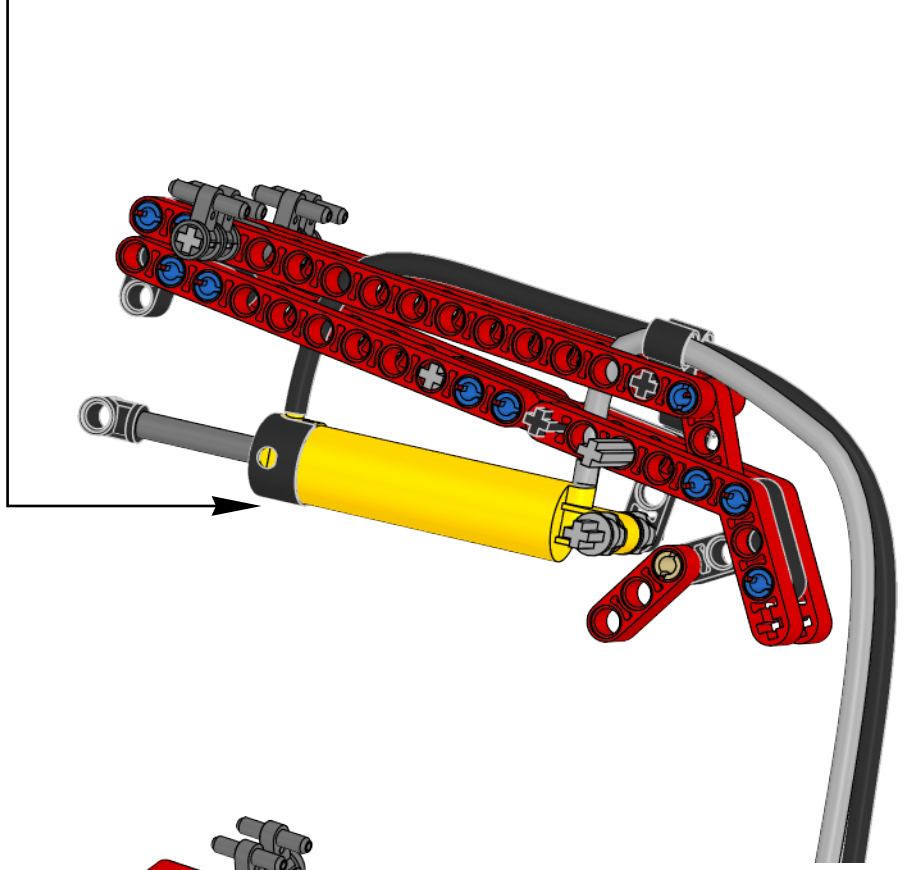

20

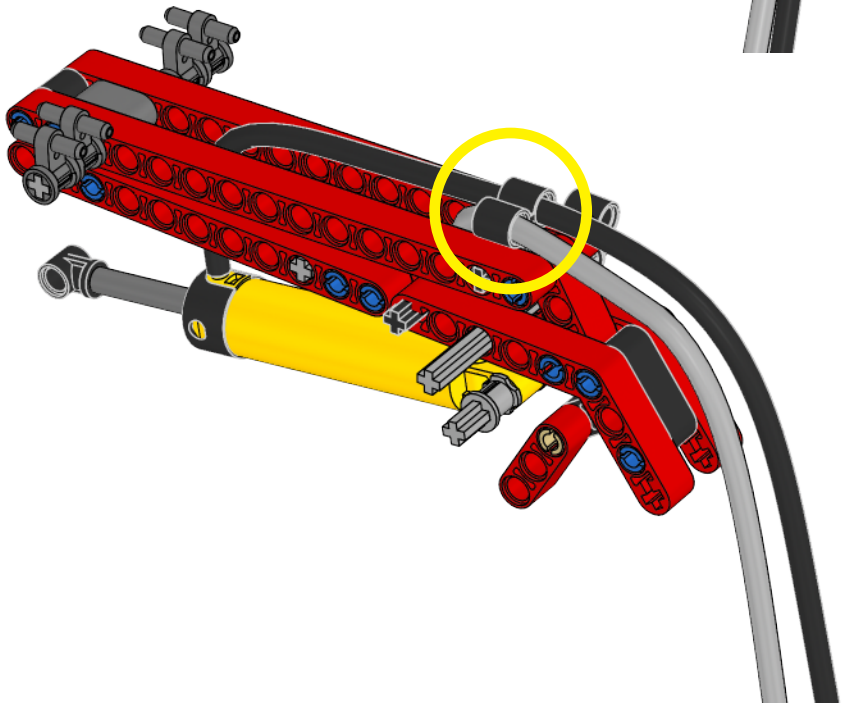

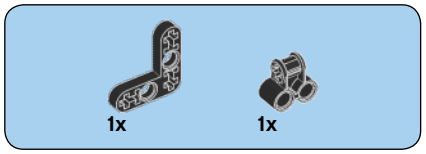

21

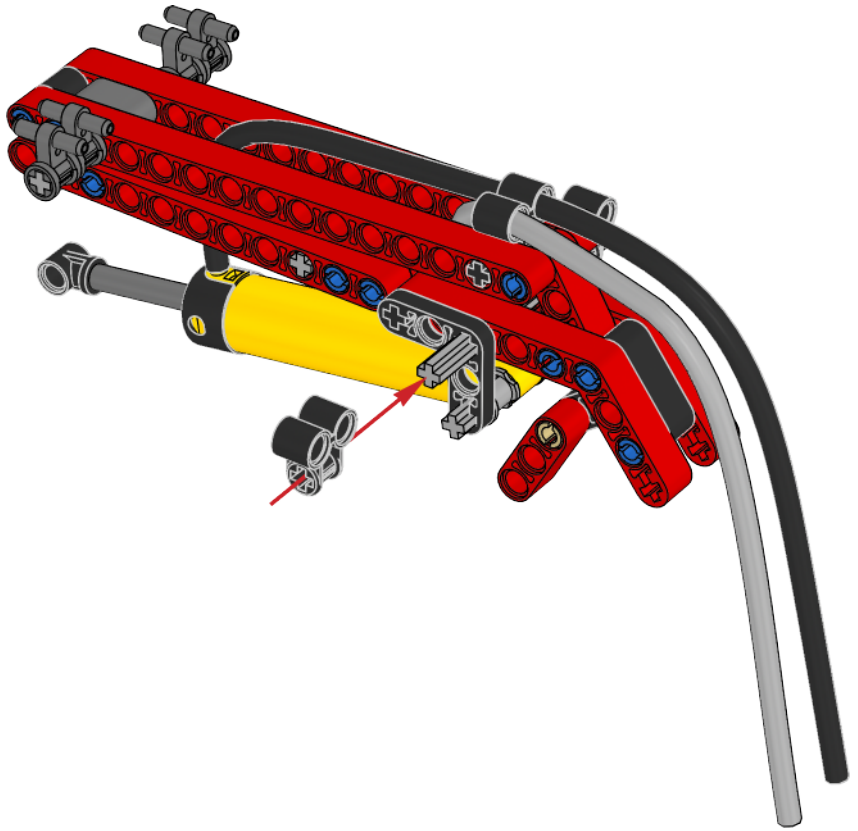

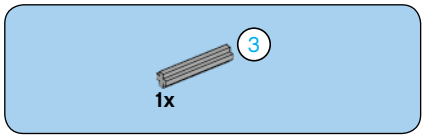

22

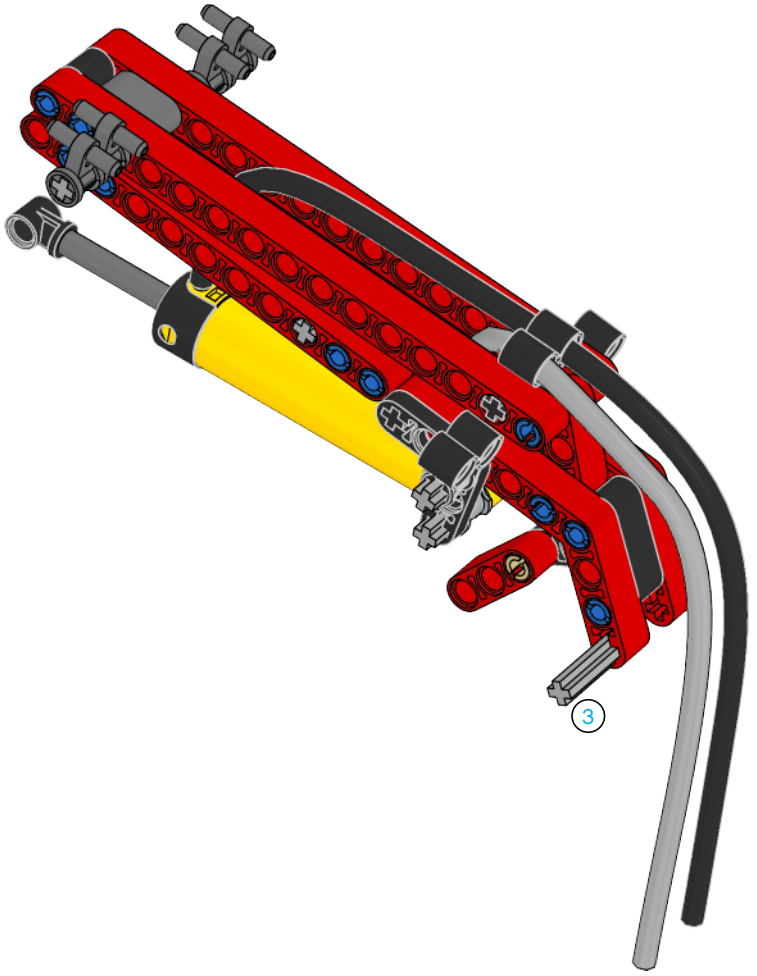

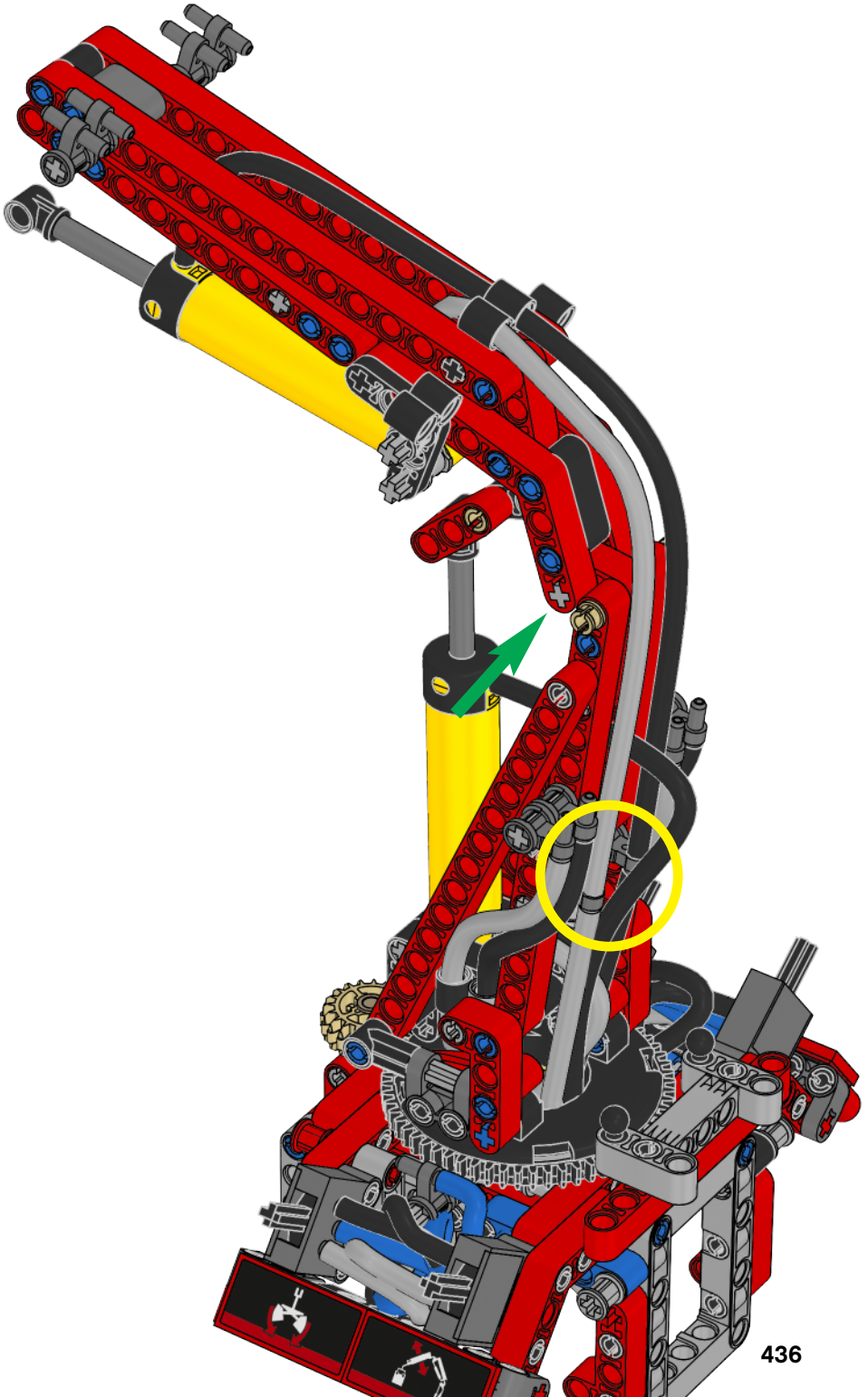

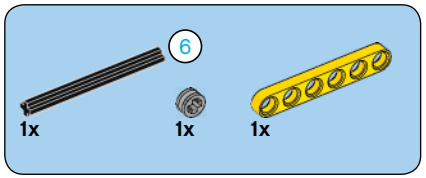

45

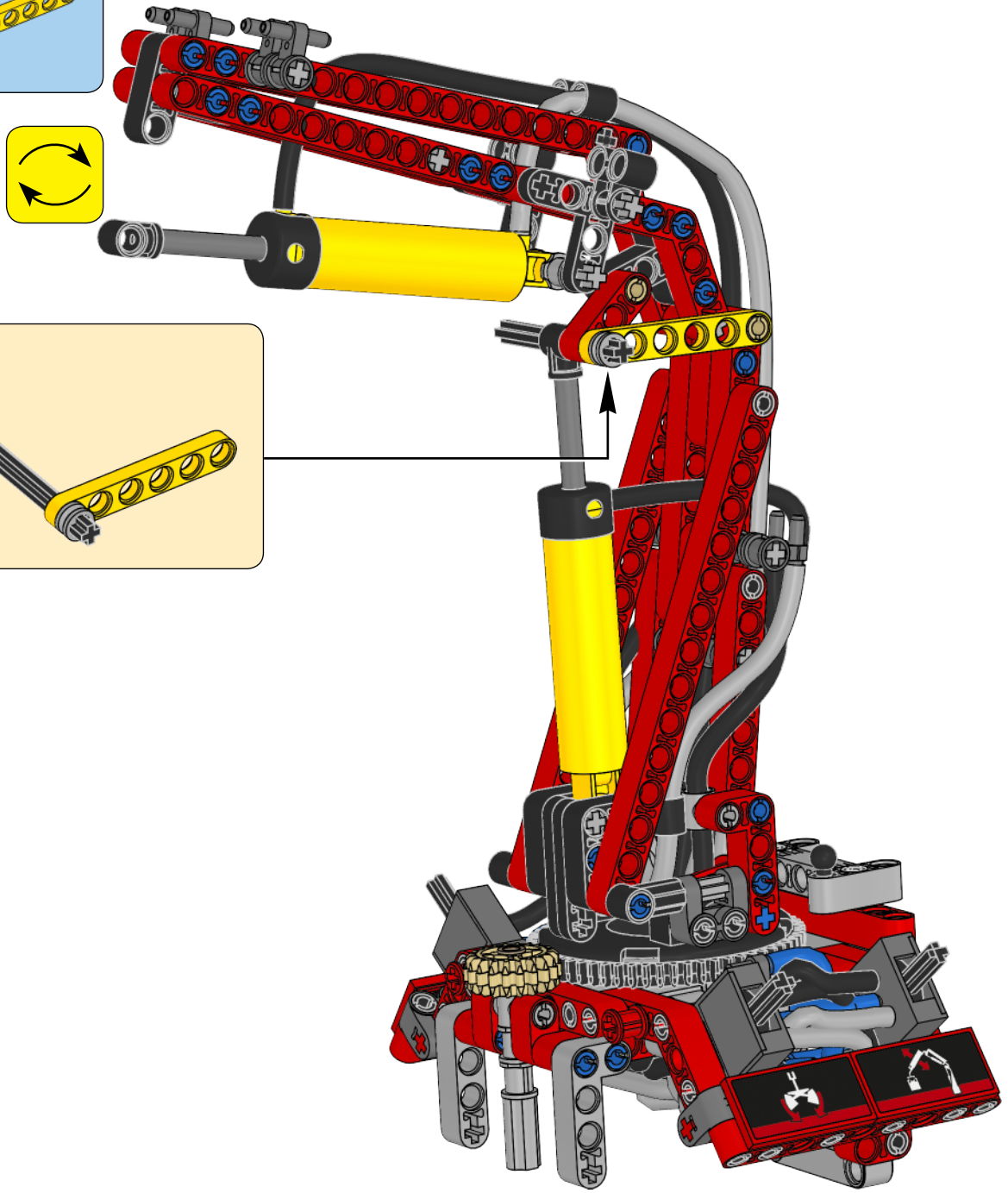

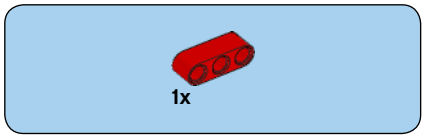

46

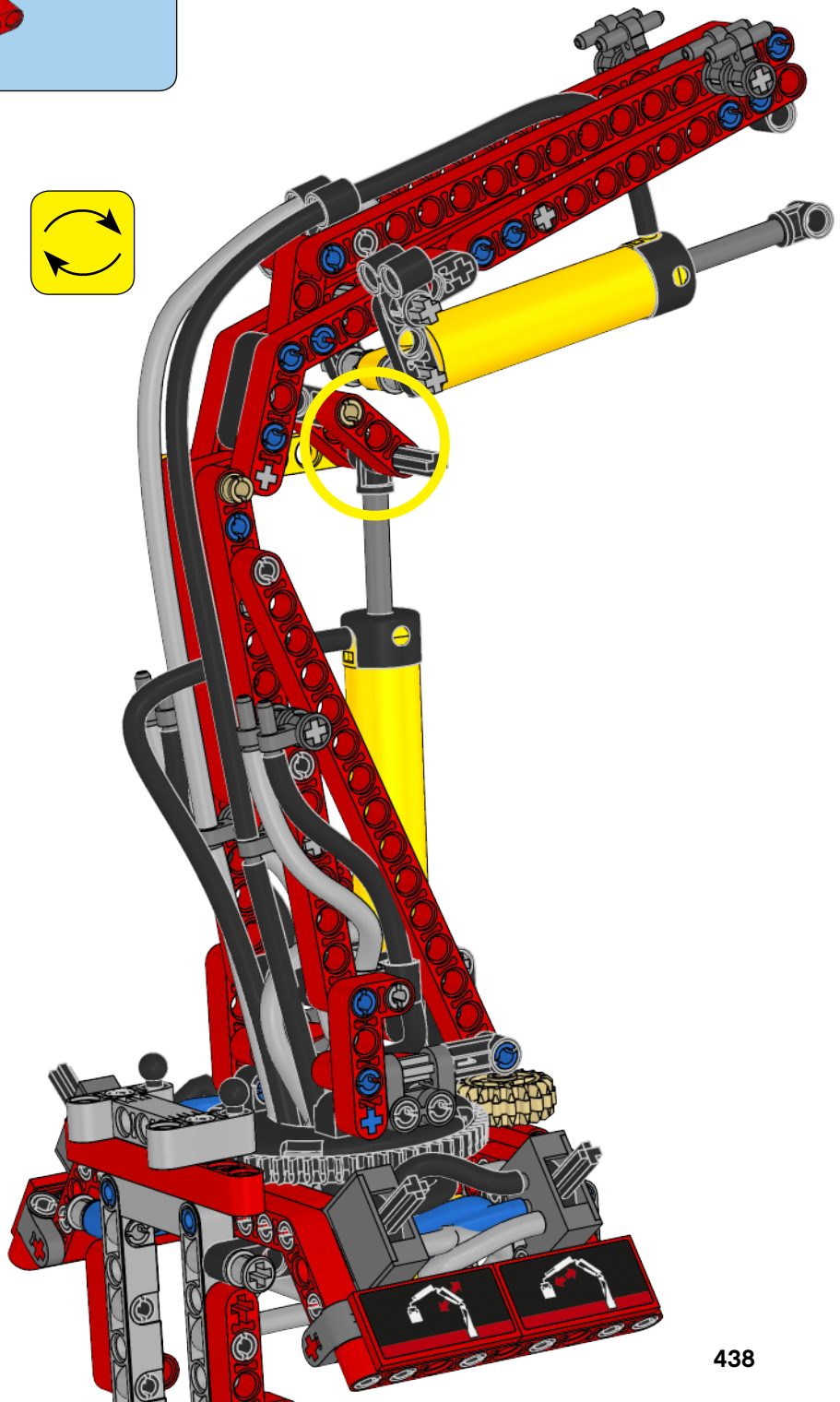

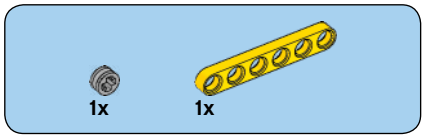

47

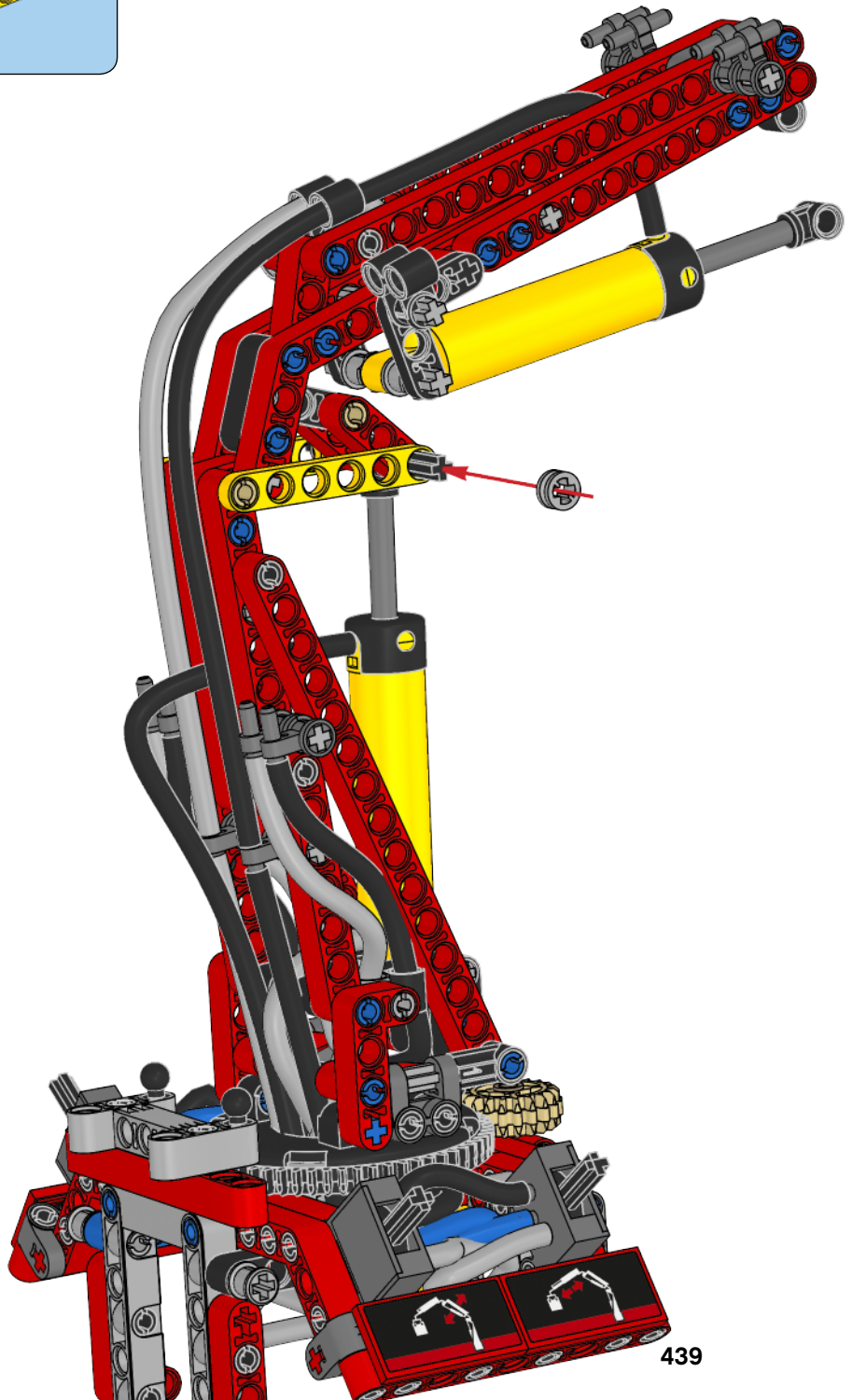

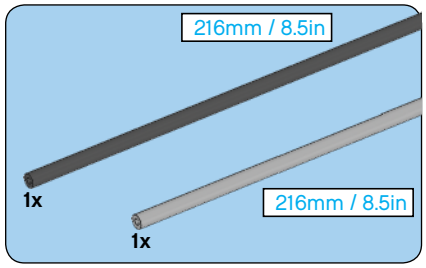
216mm / 8.5in
1x
216mm / 8.5in
1x

48

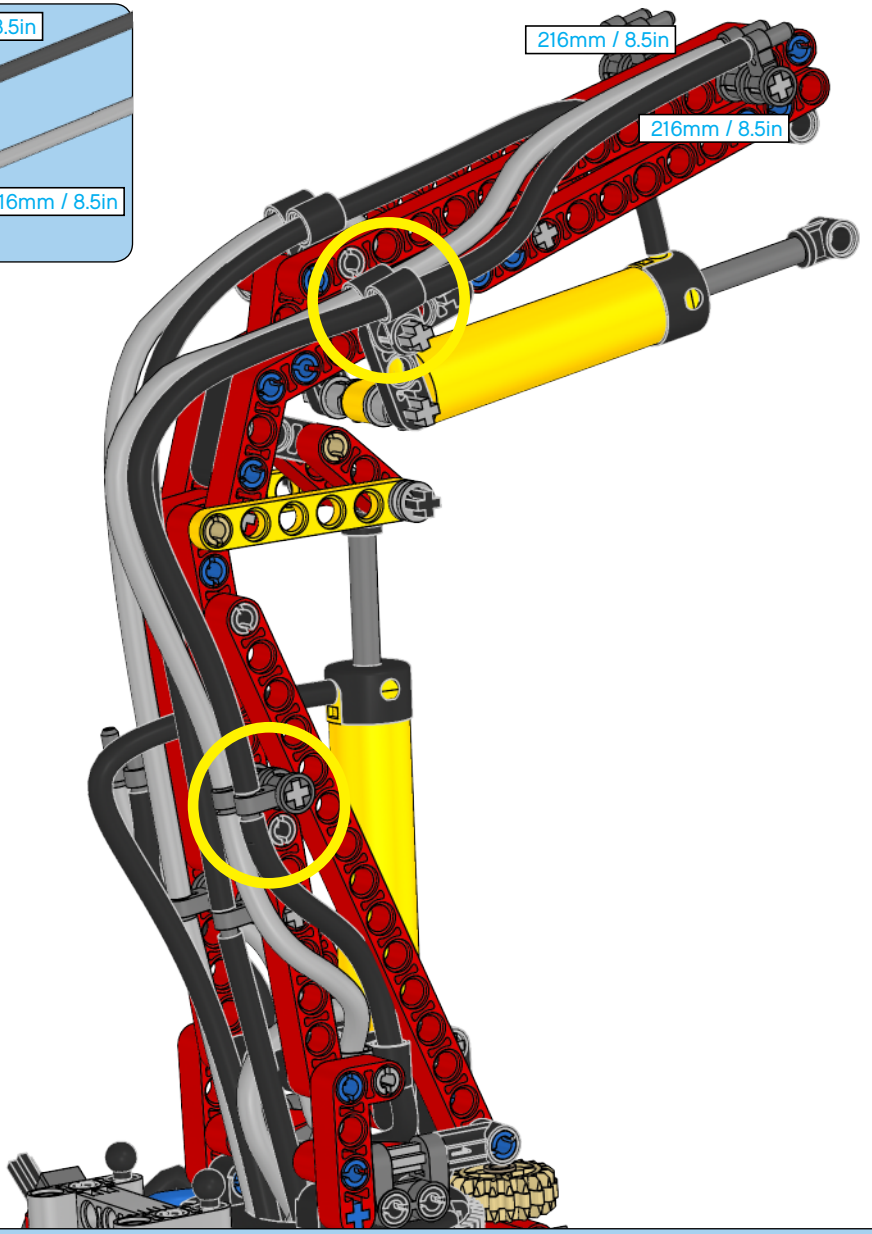
216mm / 8.5in
216mm / 8.5in

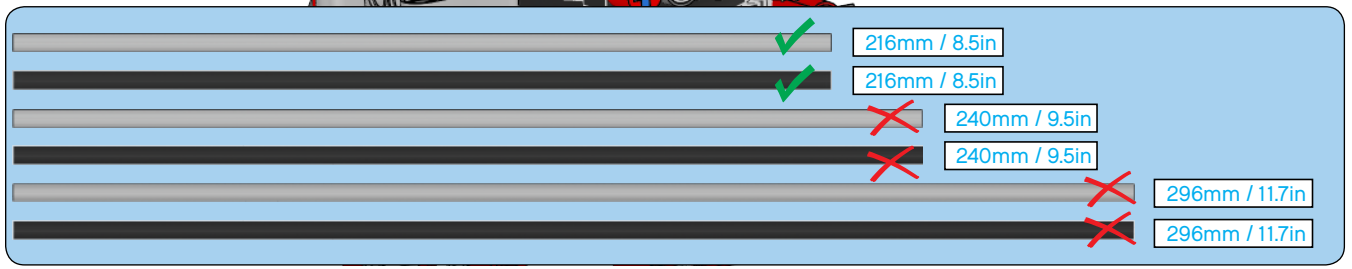
216mm / 8.5in
216mm / 8.5in
240mm / 9.5in
240mm / 9.5in
296mm / 11.7in
296mm / 11.7in

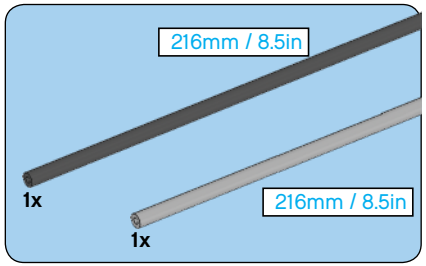
216mm / 8.5in
1x
216mm / 8.5in
1x

49

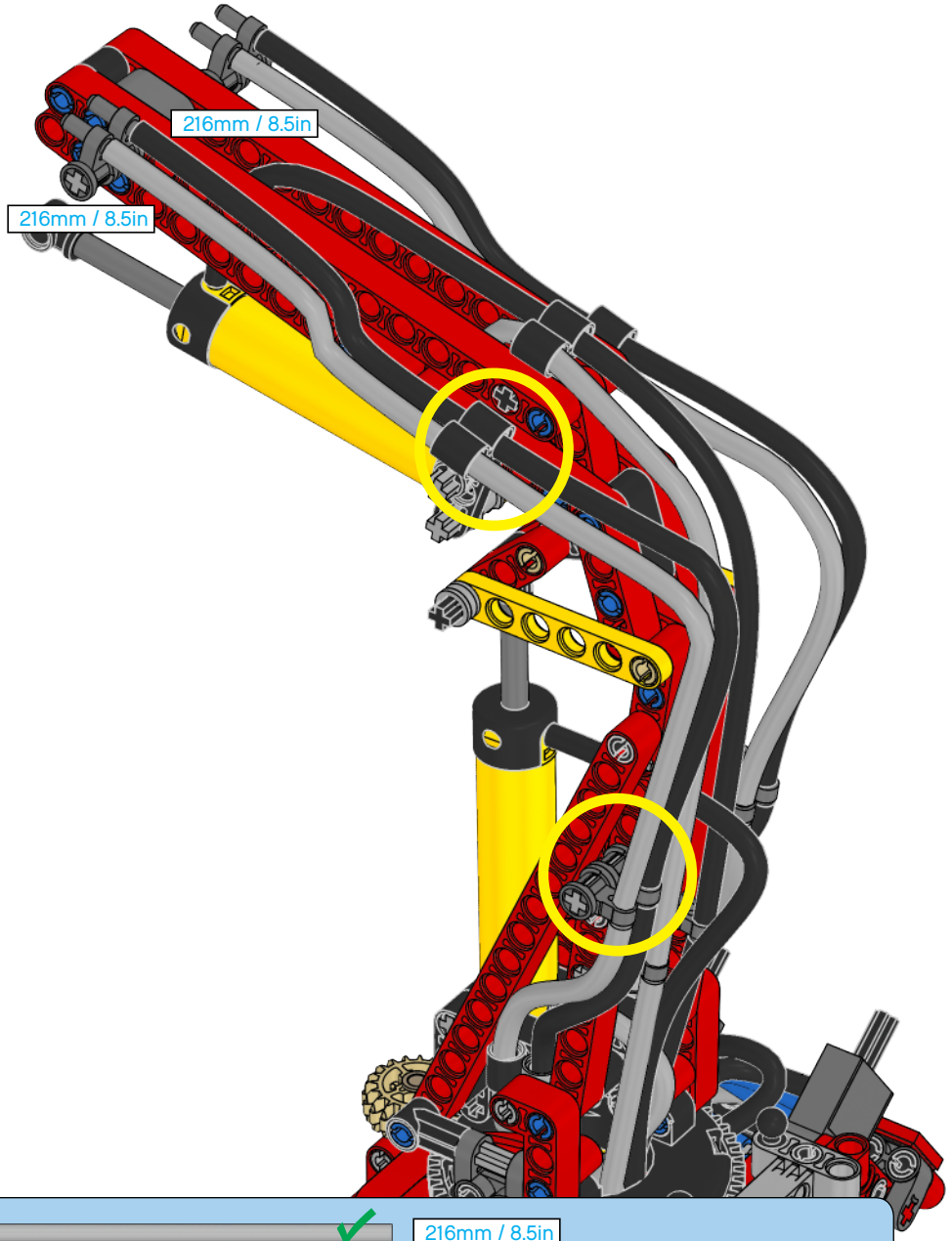
216mm / 8.5in
216mm / 8.5in


216mm / 8.5in
216mm / 8.5in
240mm / 9.5in
240mm / 9.5in
296mm / 11.7in
296mm / 11.7in

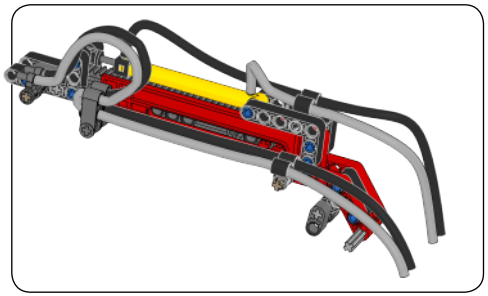

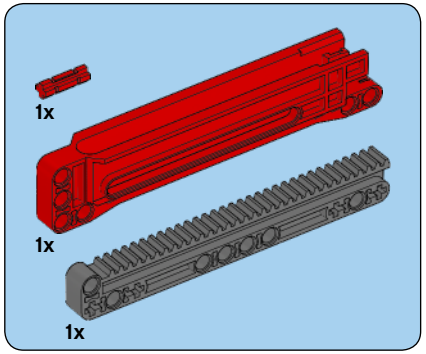

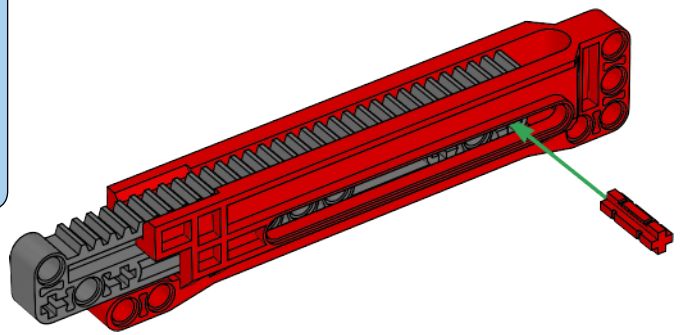

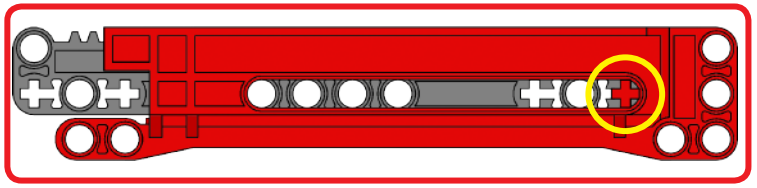

1

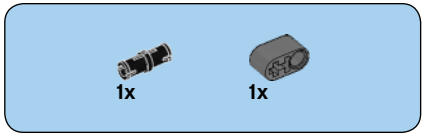

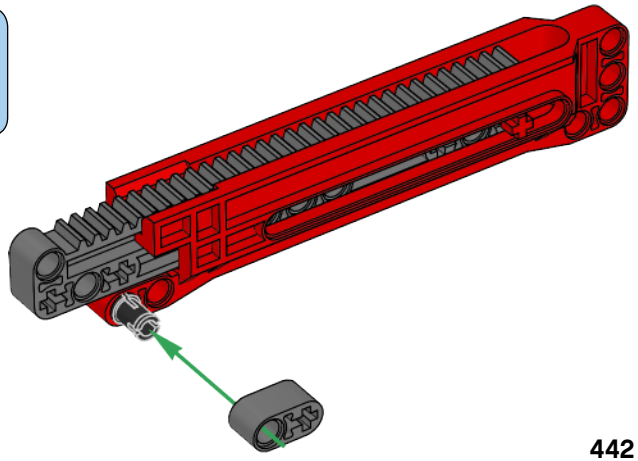

2

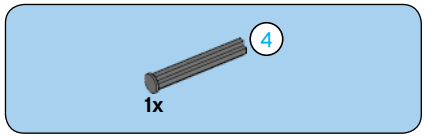

3

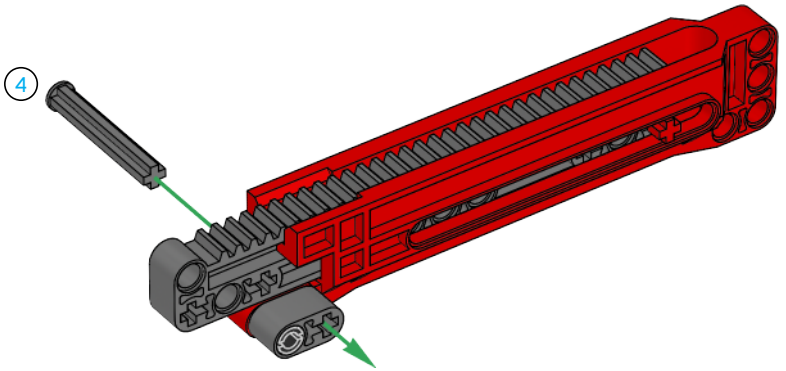

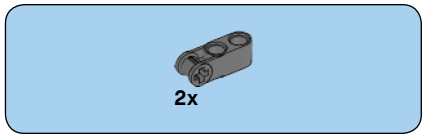

4

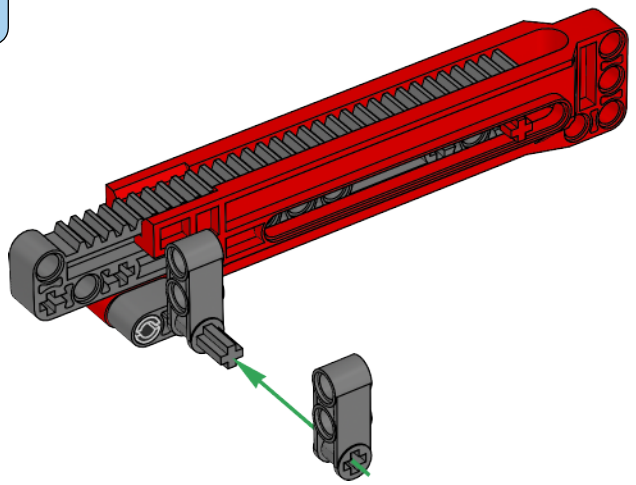

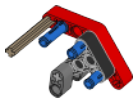

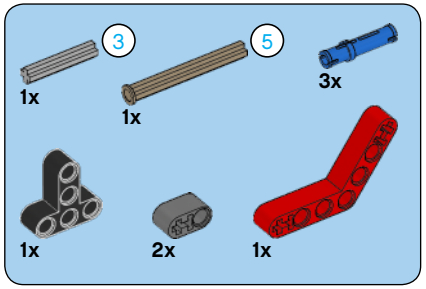

5

1

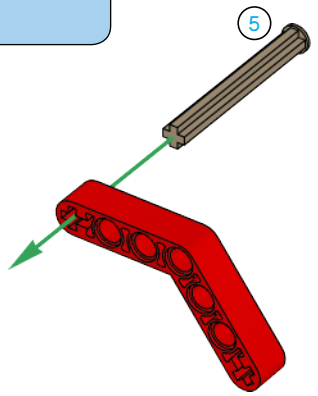

2

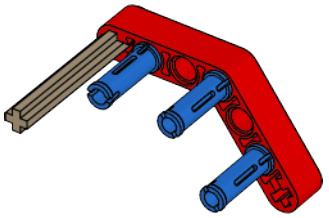

3

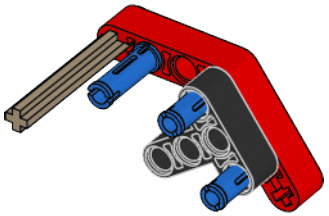

4

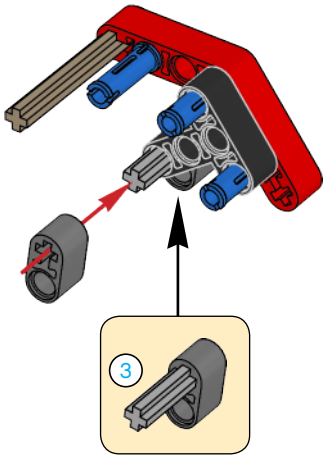

5

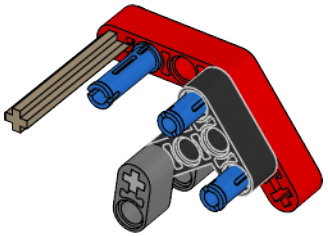

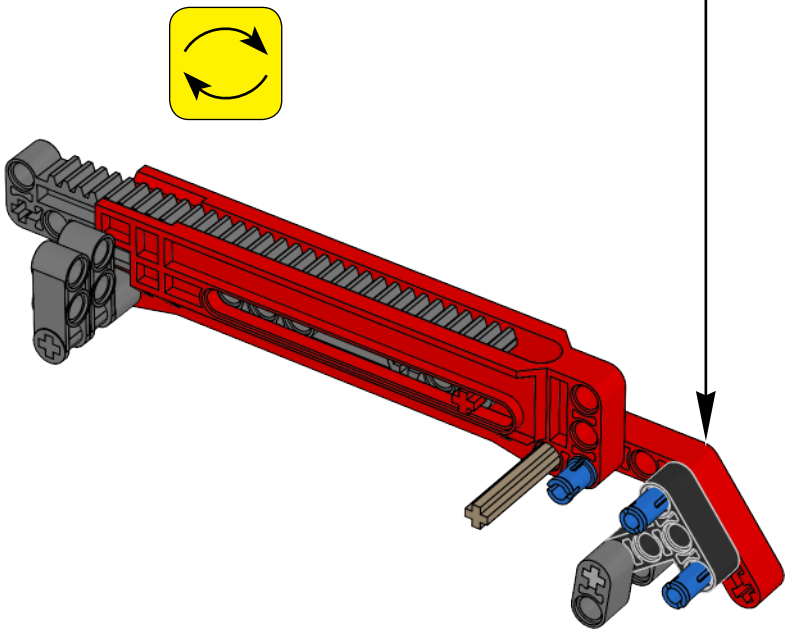



1x

6

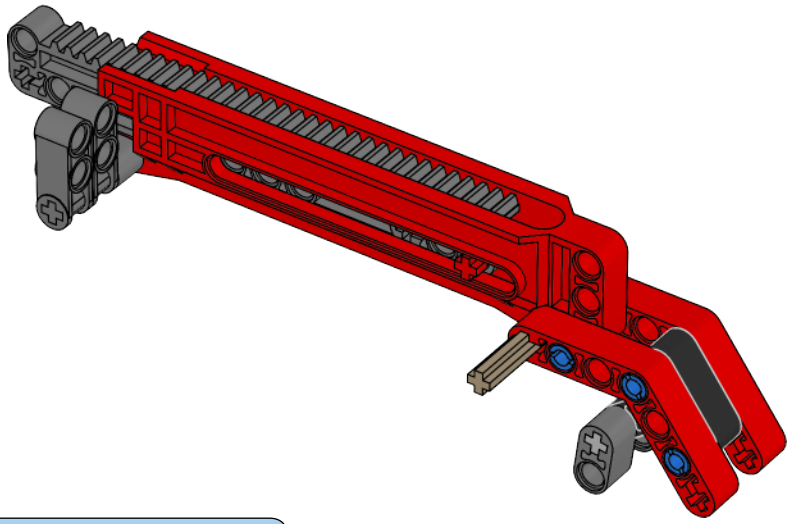



1x



1x

7

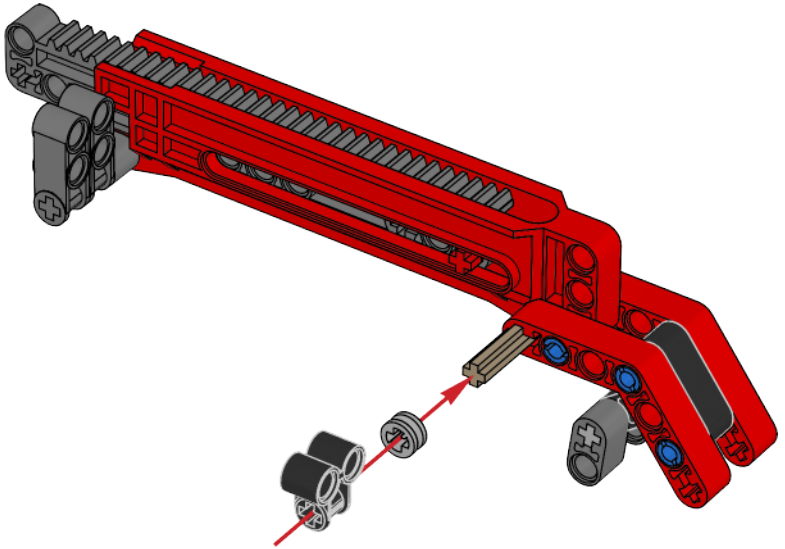

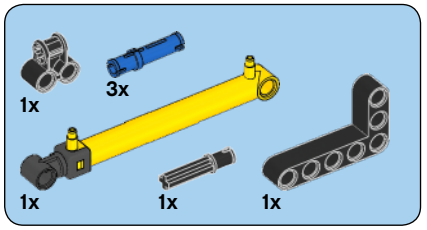

8

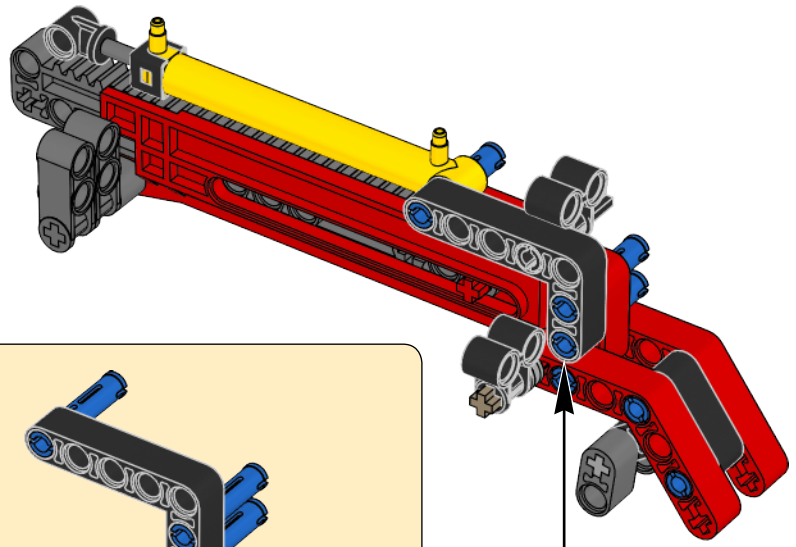

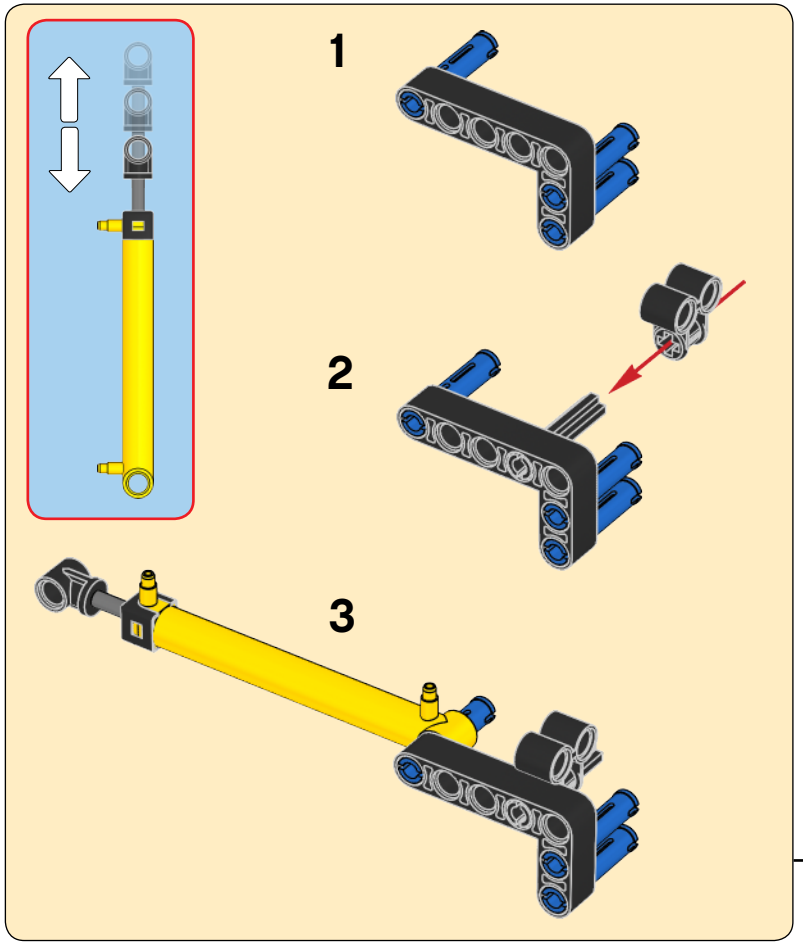

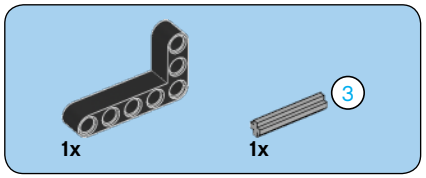

9

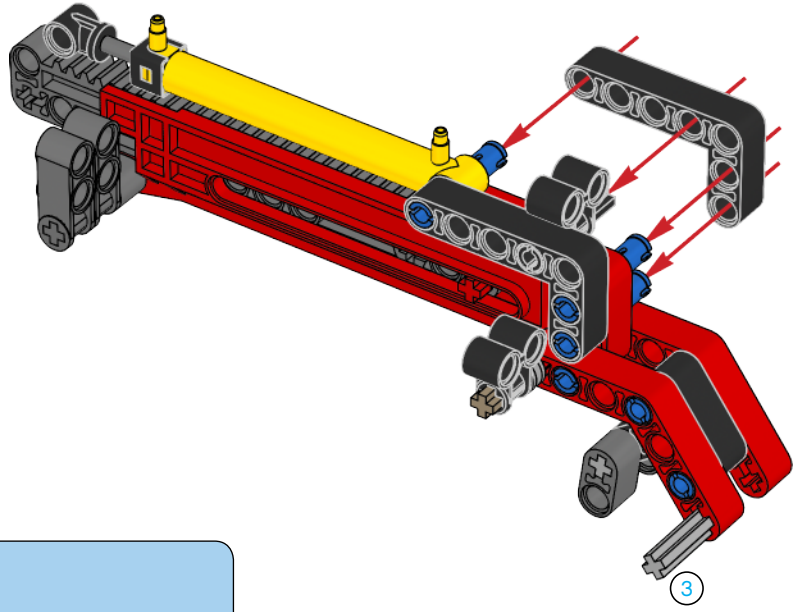

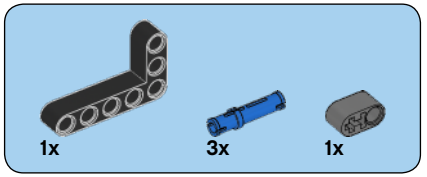

10

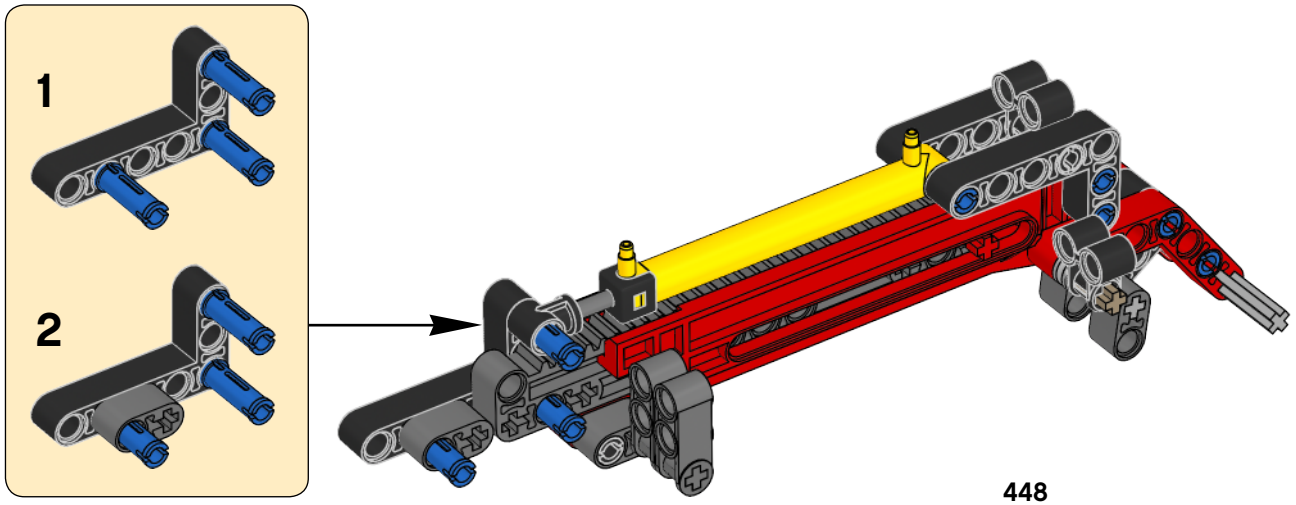

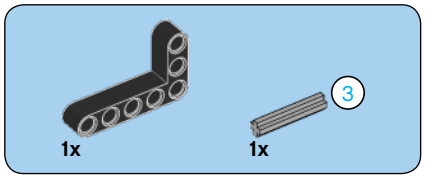

11

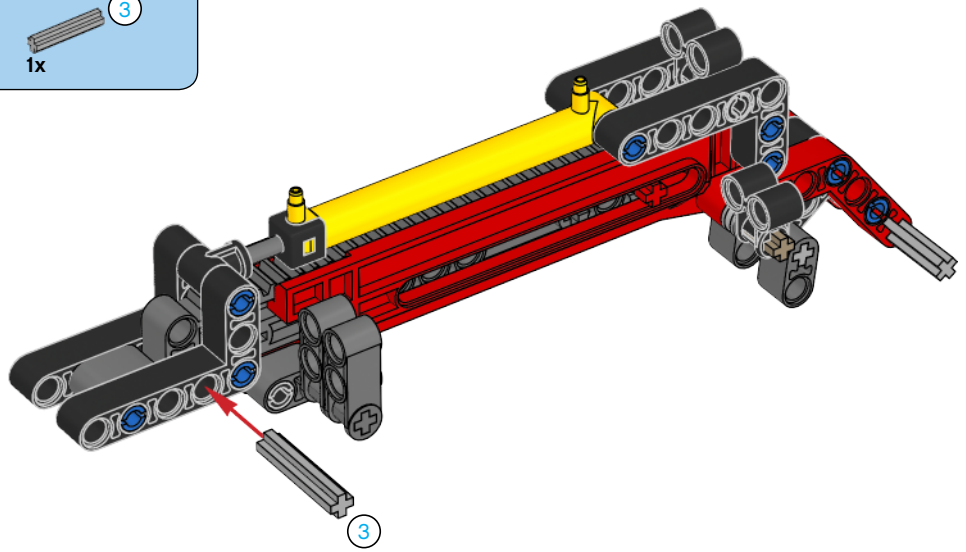

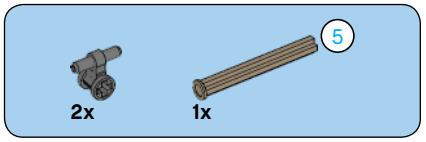

12

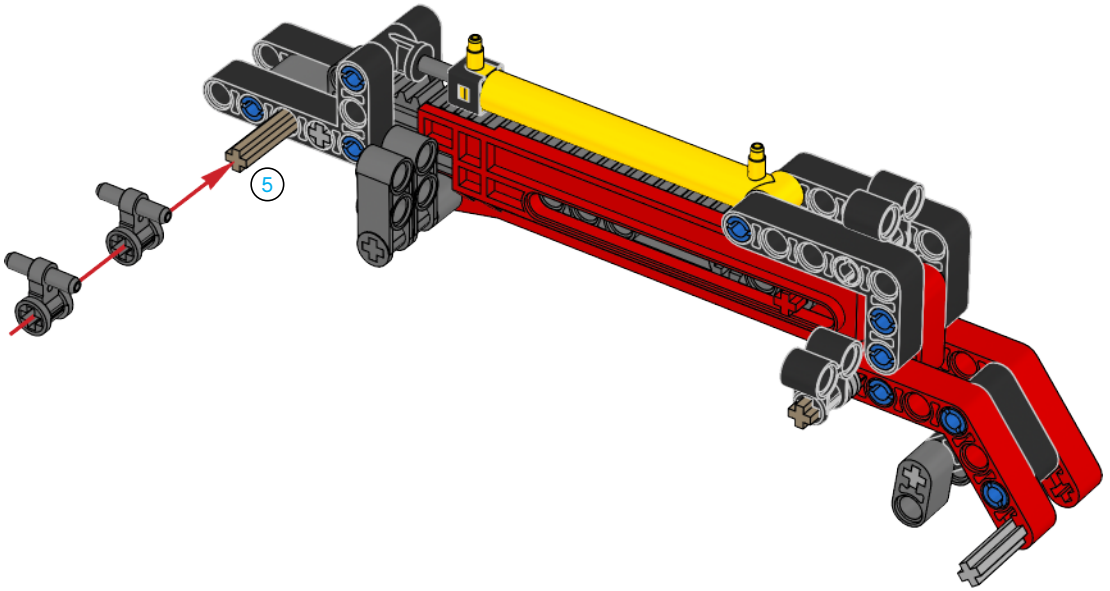

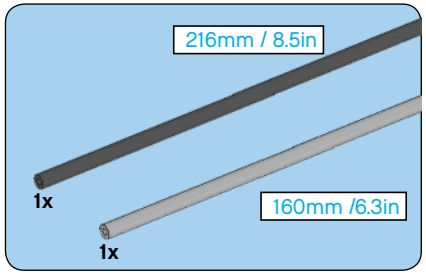
216mm / 8.5in
1x
160mm /6.3in
1x

13

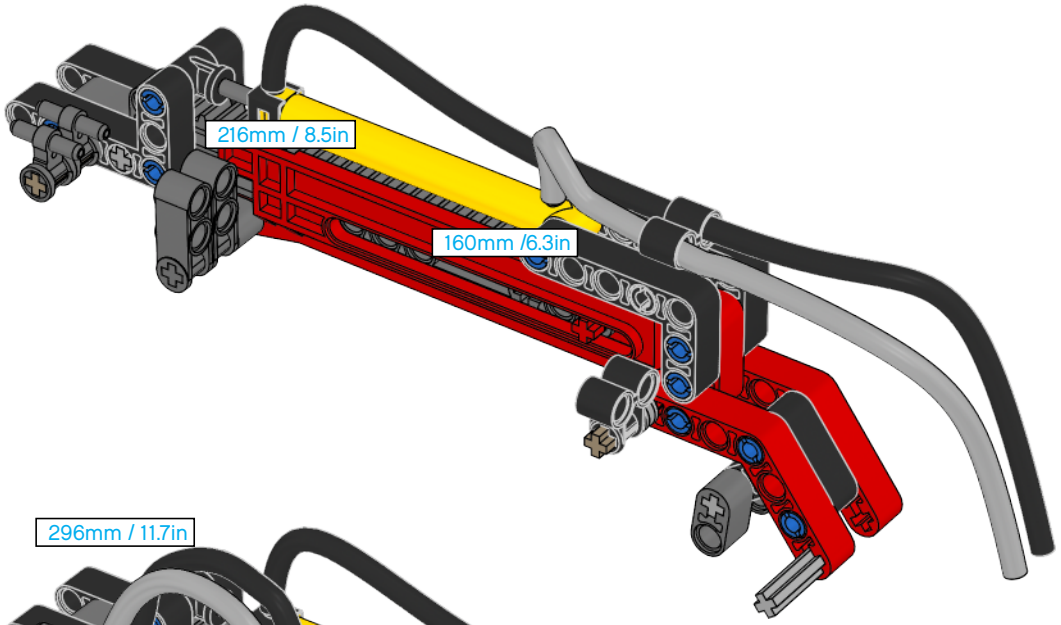
216mm / 8.5in
160mm /6.3in

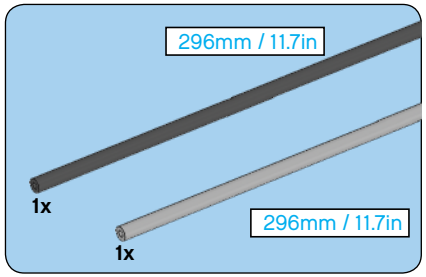
296mm / 11.7in
1x
296mm / 11.7in
1x

14

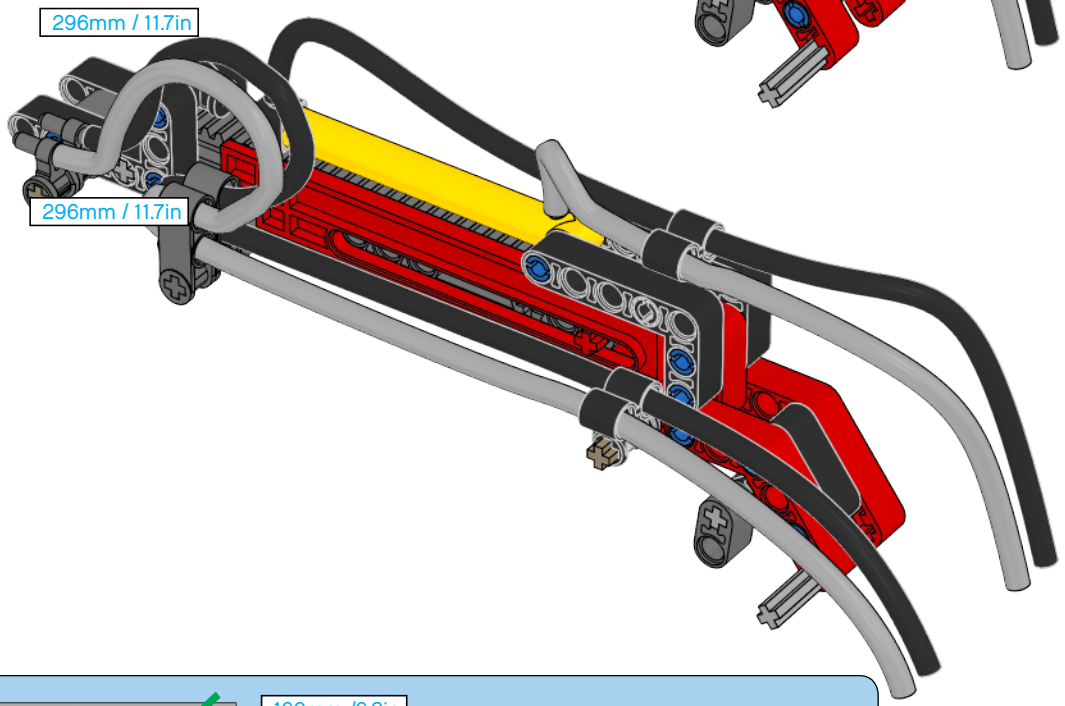
296mm / 11.7in
296mm / 11.7in

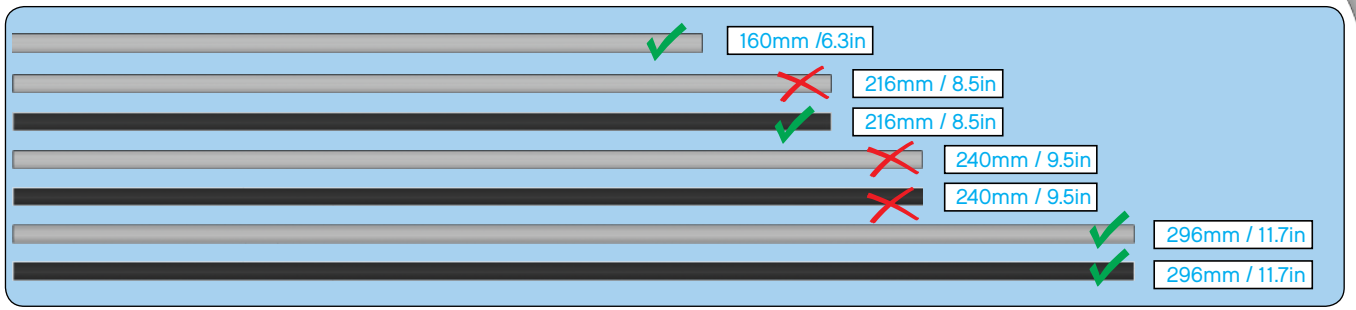
160mm /6.3in
216mm / 8.5in
216mm / 8.5in
240mm / 9.5in
240mm / 9.5in
296mm / 11.7in
296mm / 11.7in

50

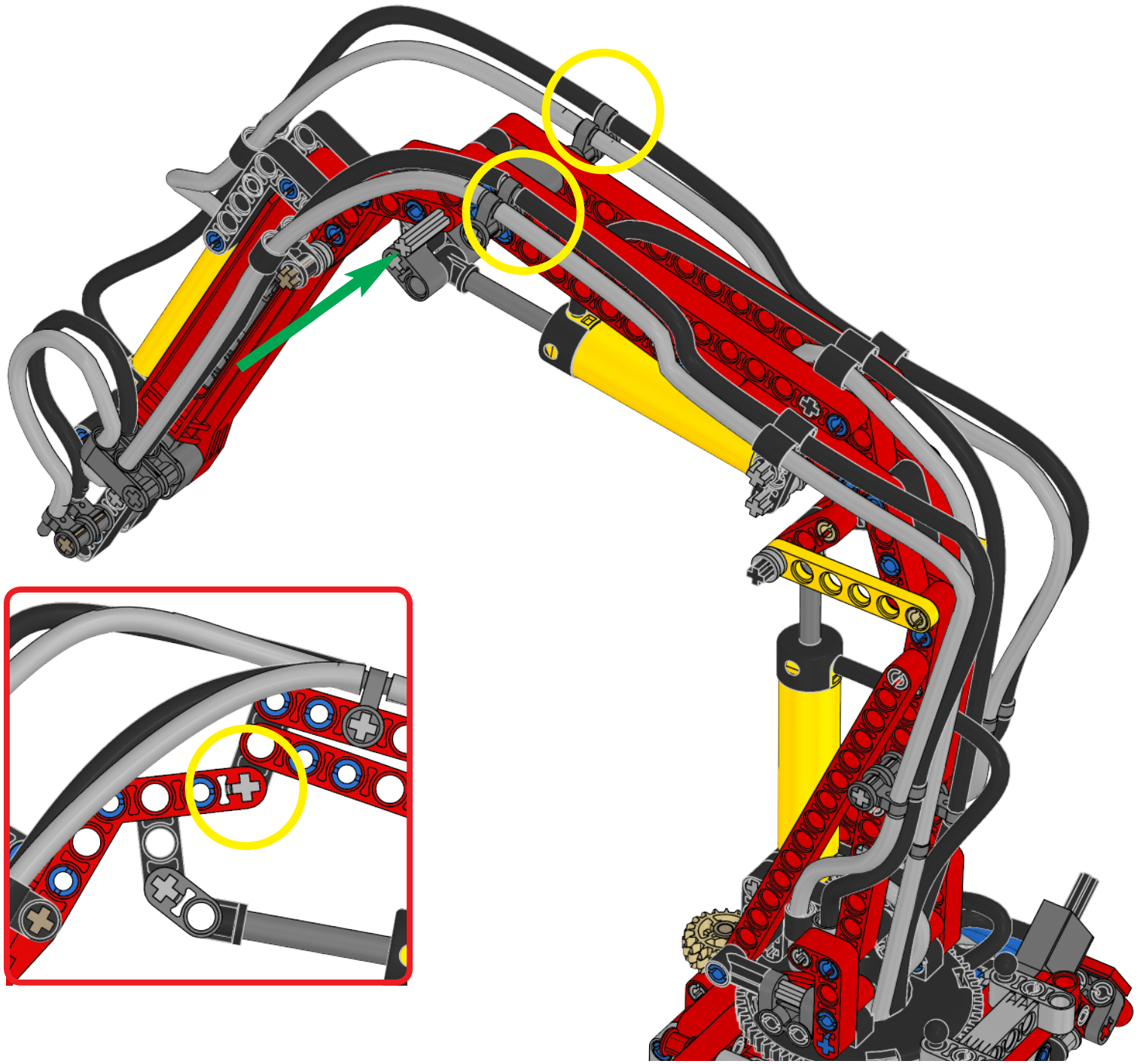

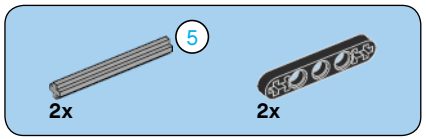

51

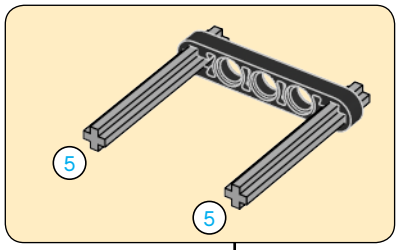

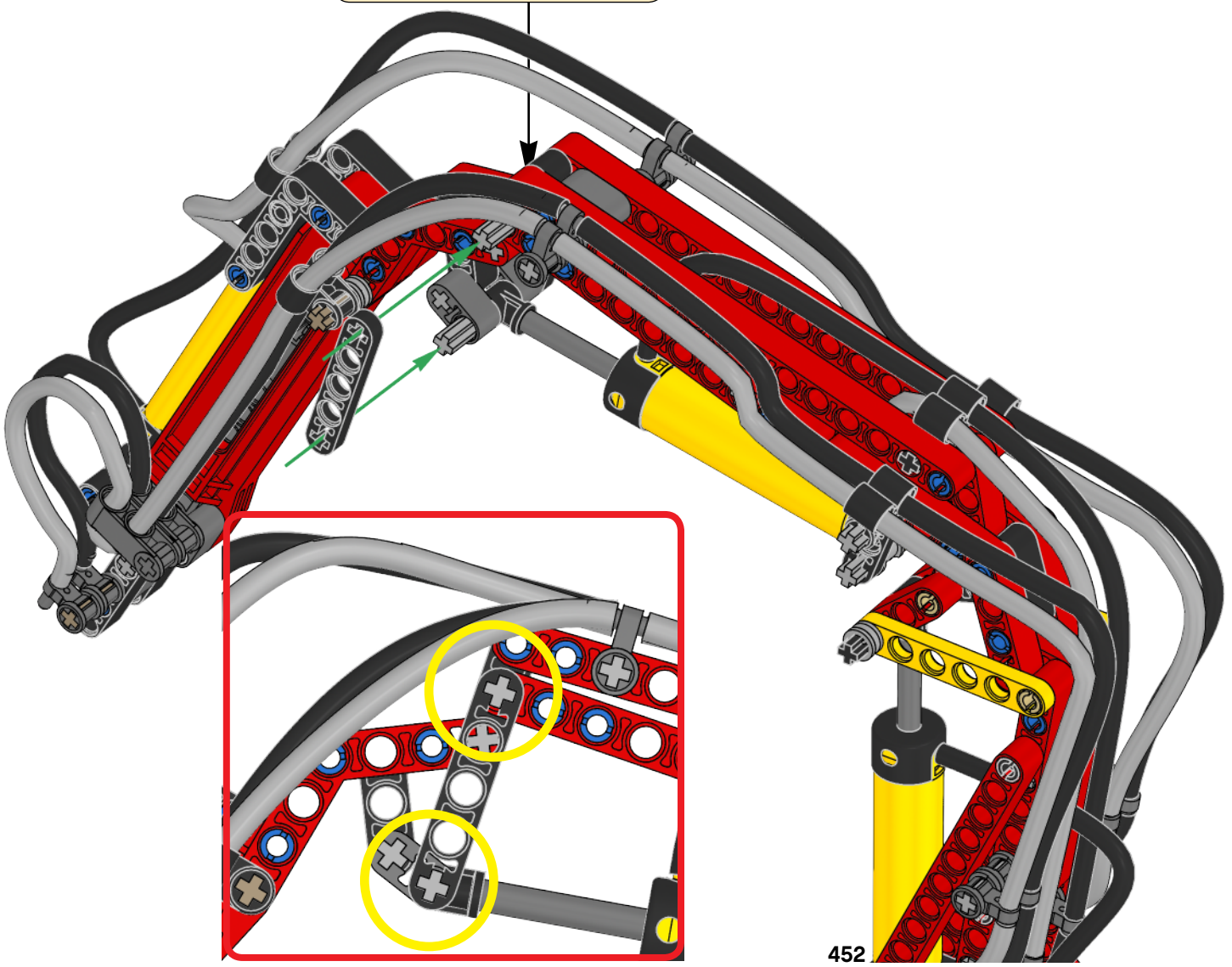

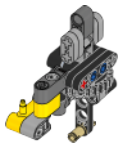


2x


1x

1

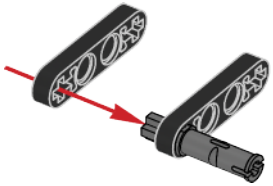


1x


2x

2

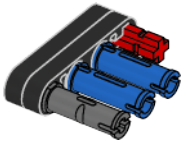


1x

3

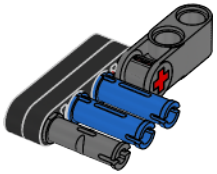

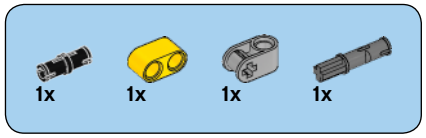

4

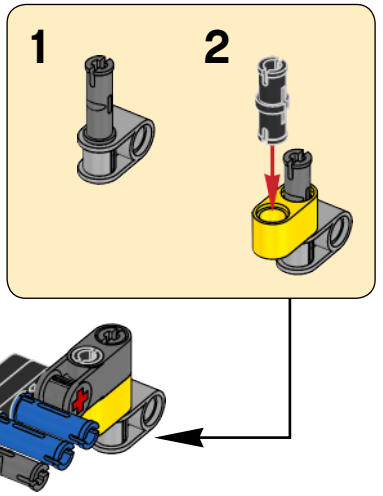

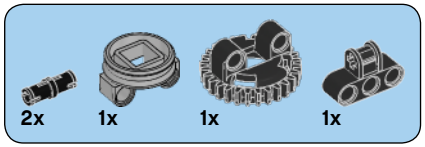

5

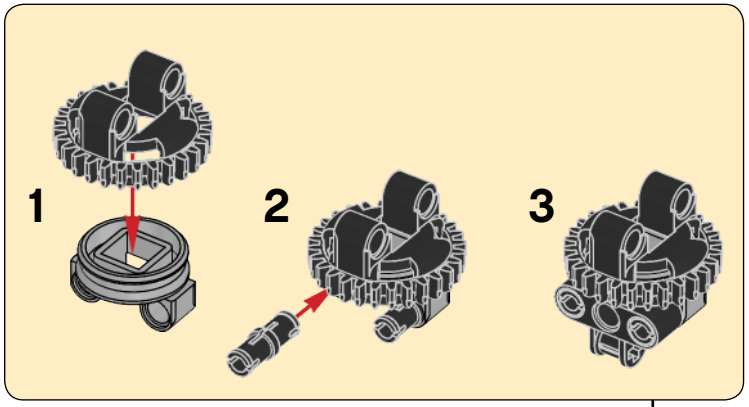

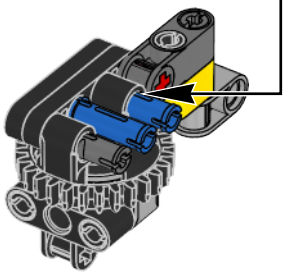

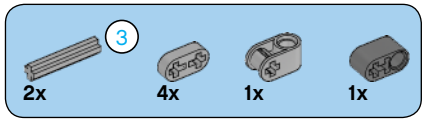

6

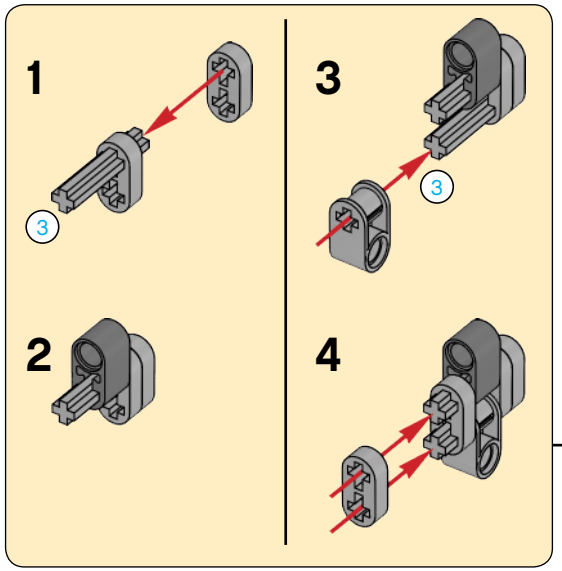

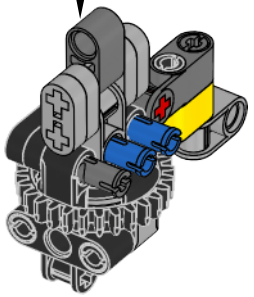

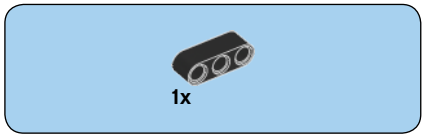

7

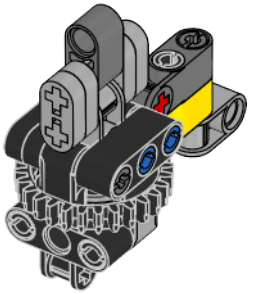

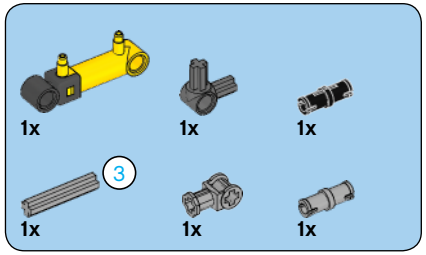

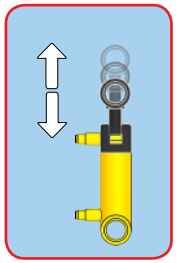

8

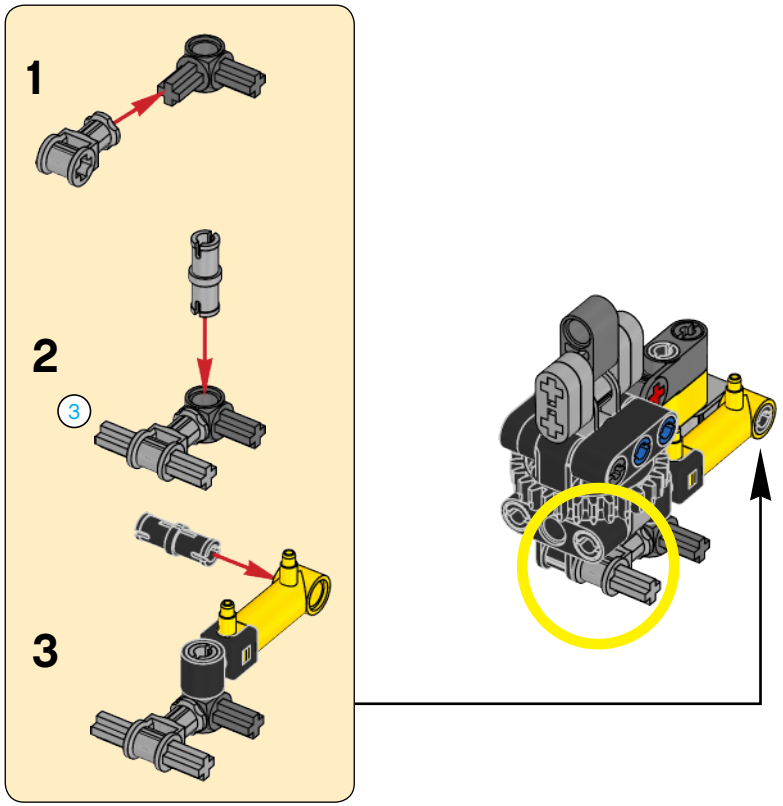

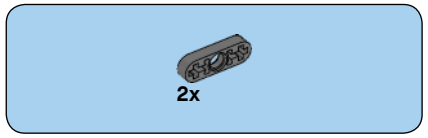

9

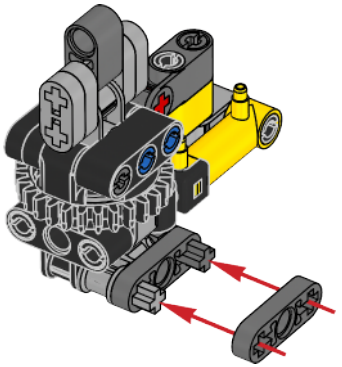

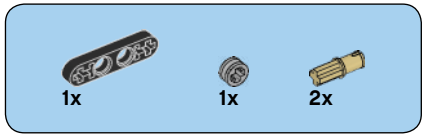

10

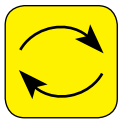

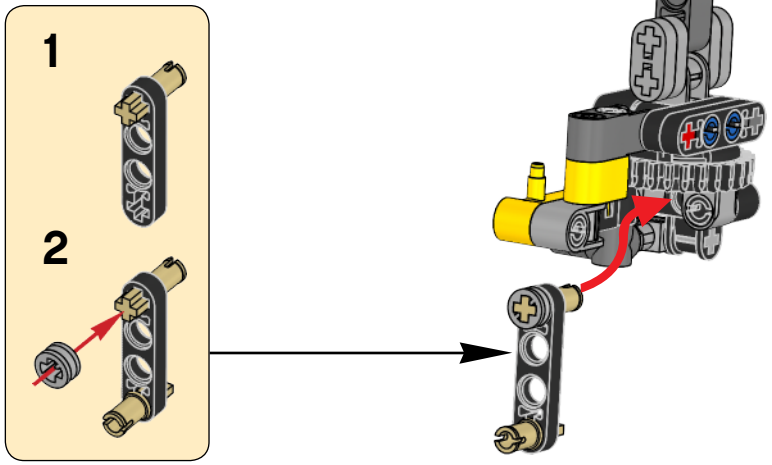

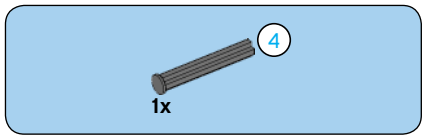

52

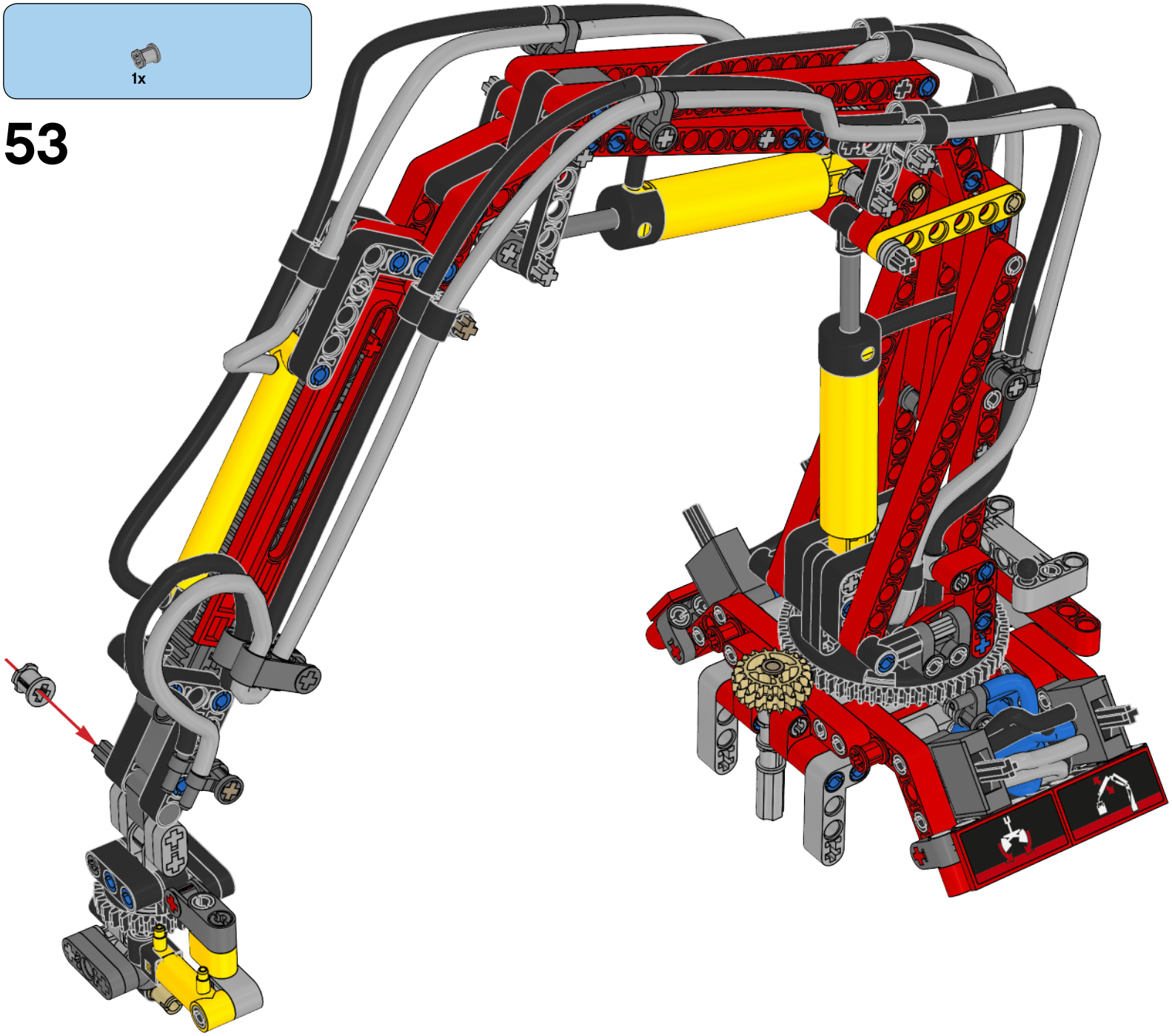

53

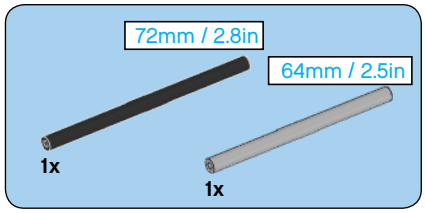

54

55

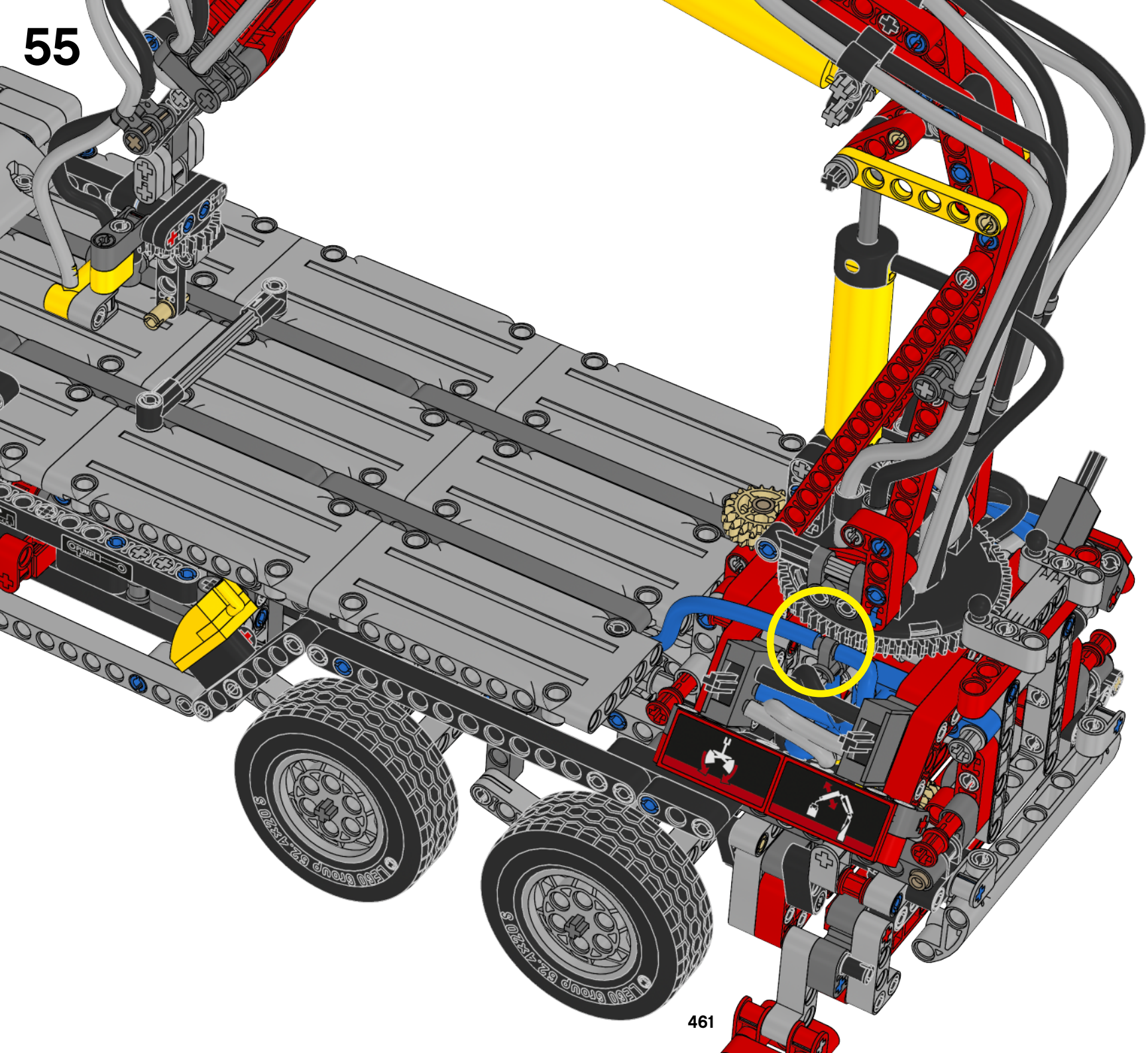

56

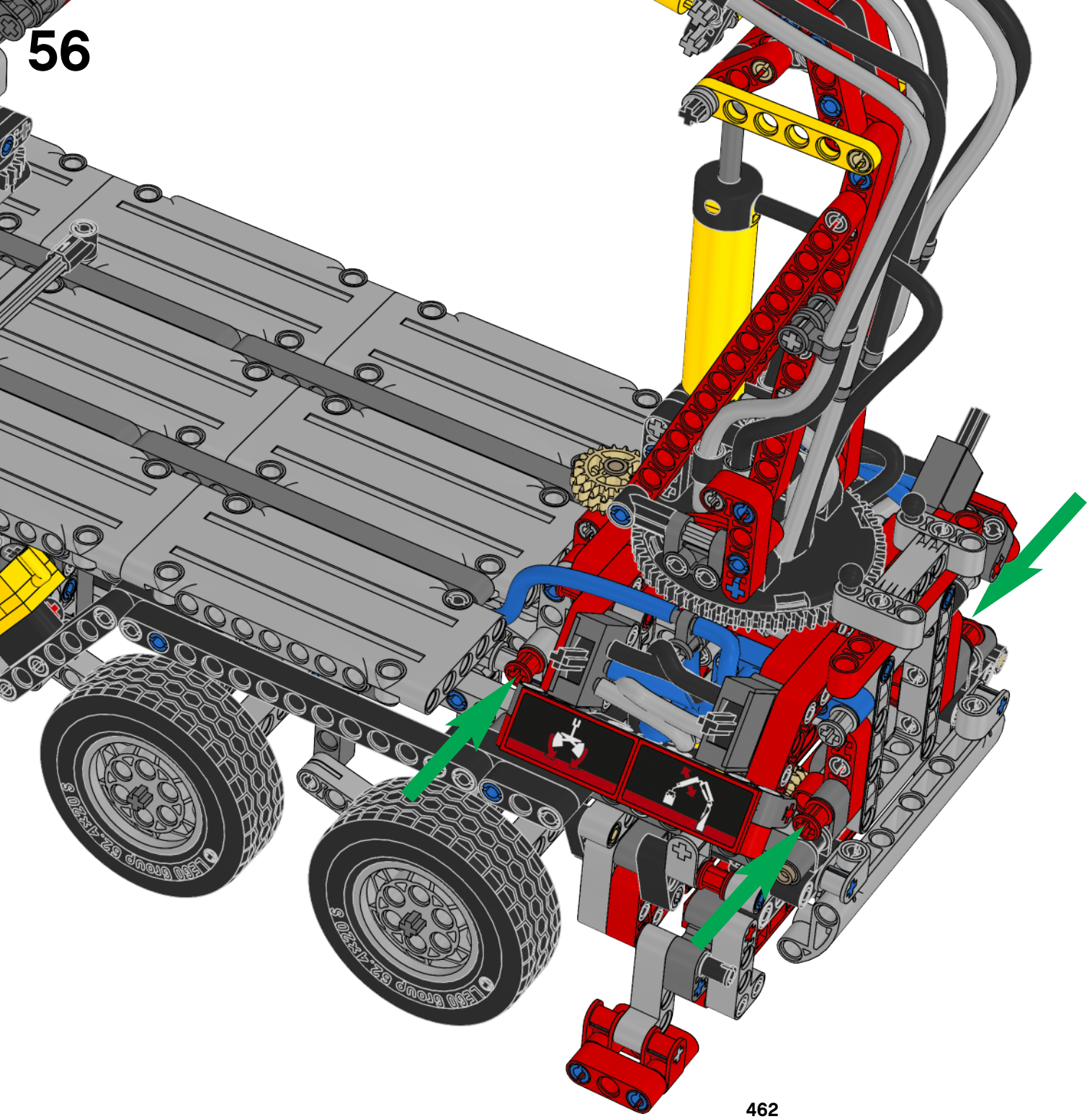

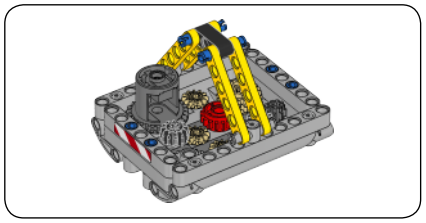

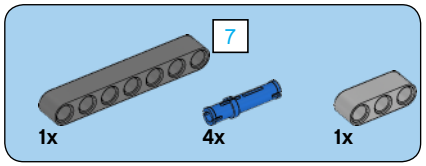

1

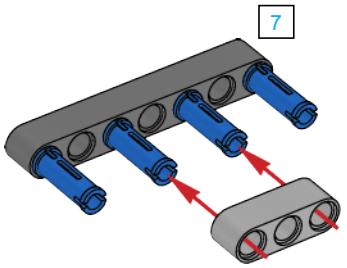

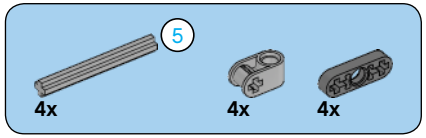

2

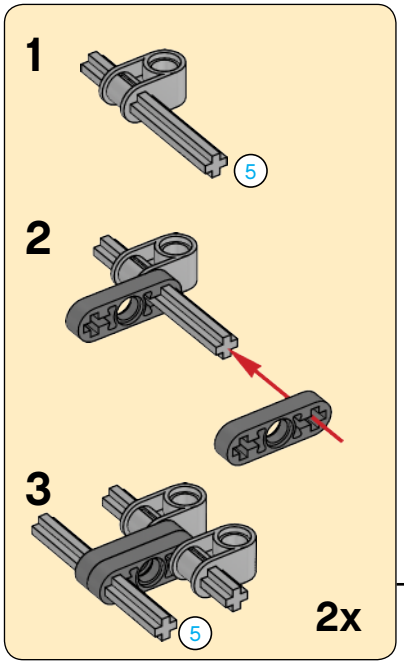

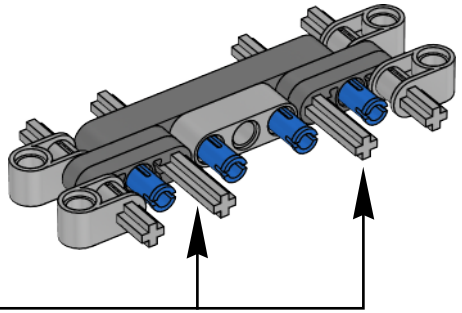

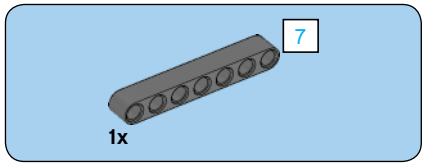

3

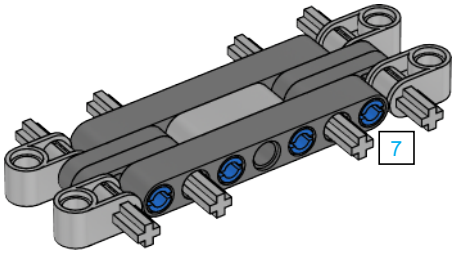

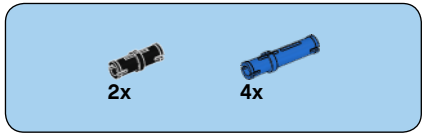

4

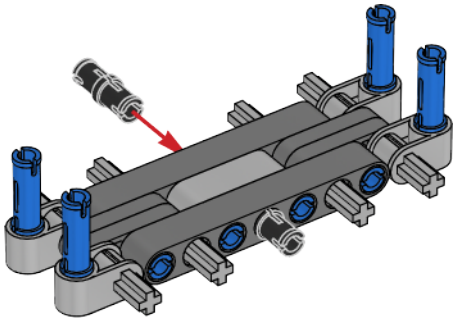

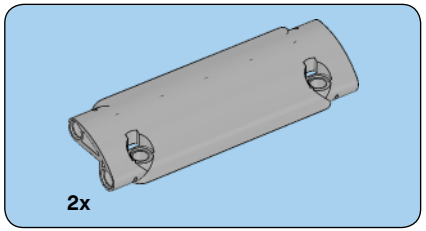

5

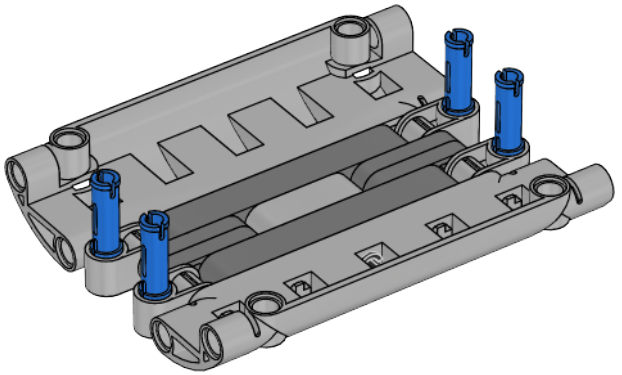

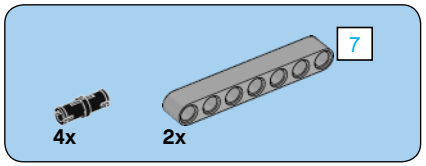

6

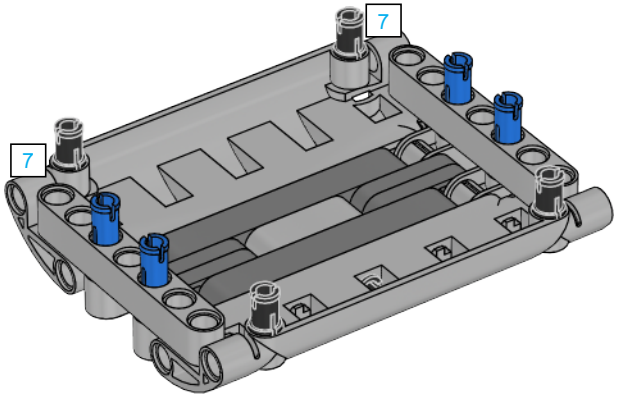

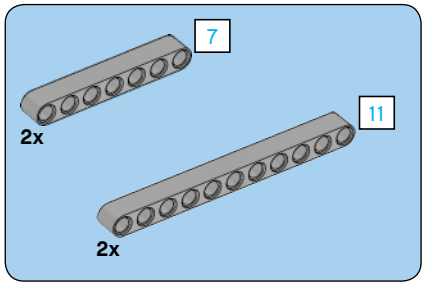

7

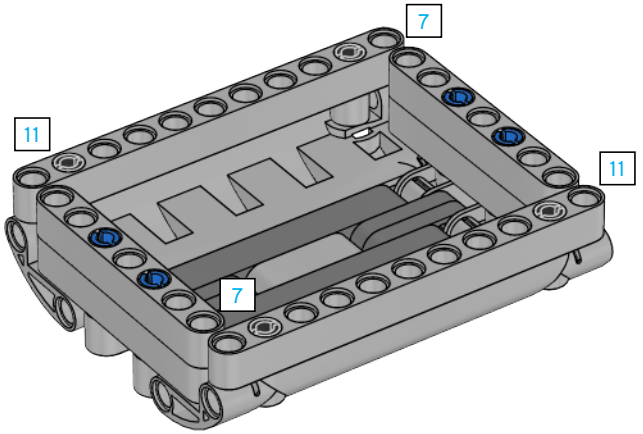

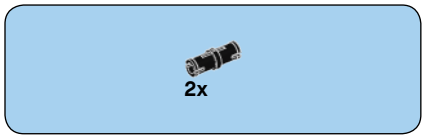

8

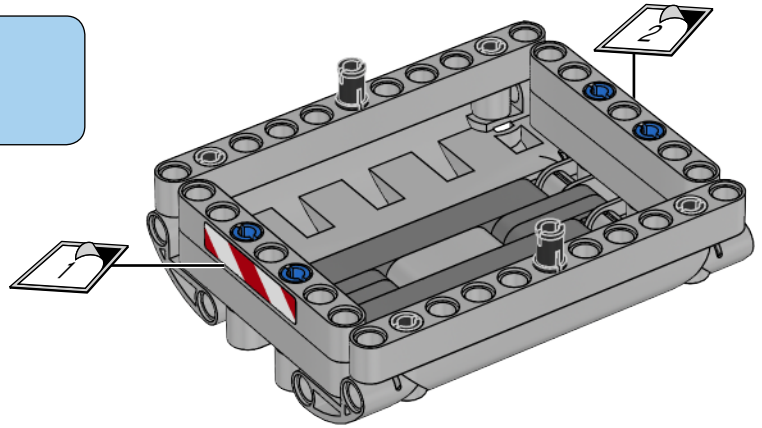

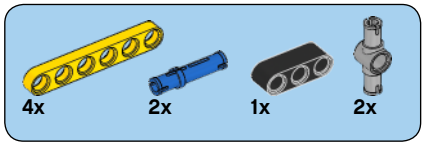

9

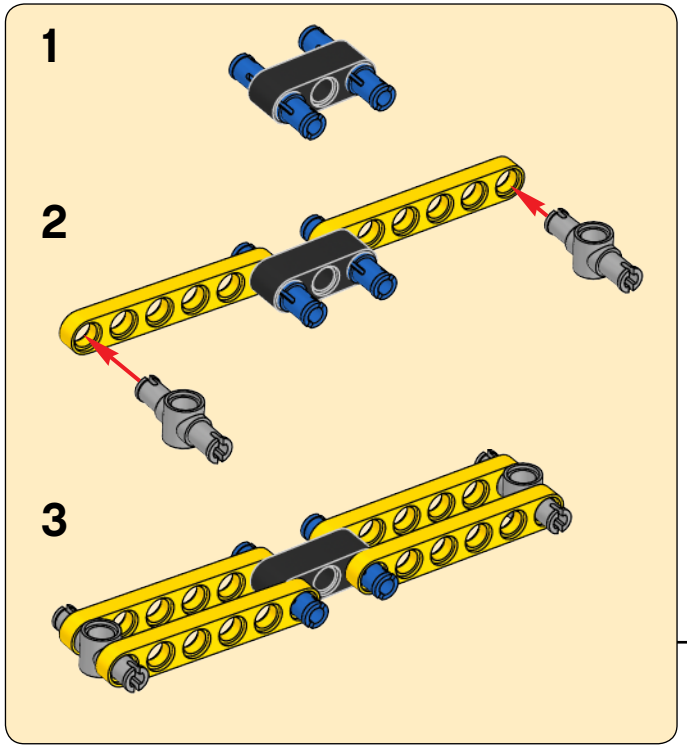

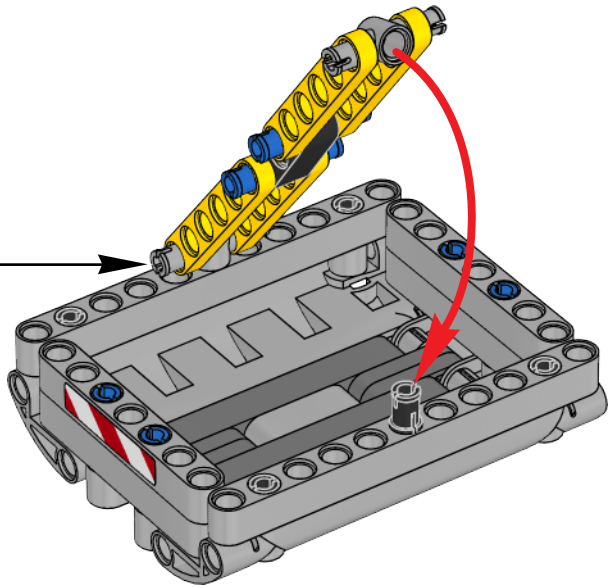

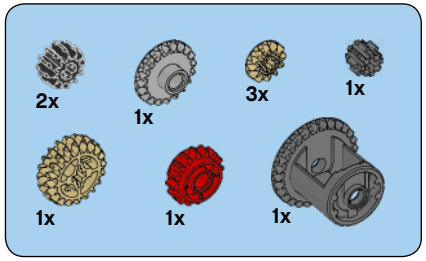

10

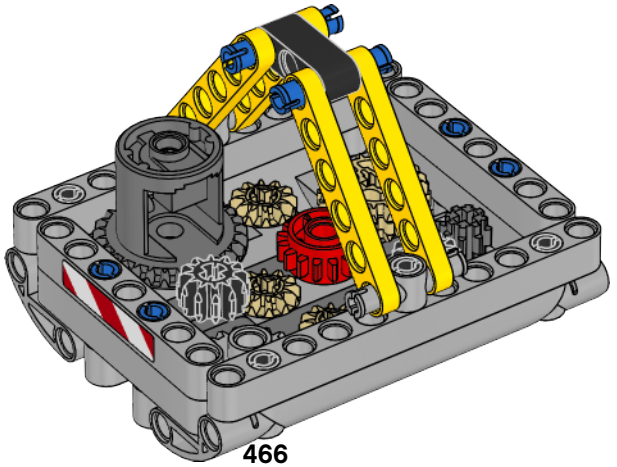

57

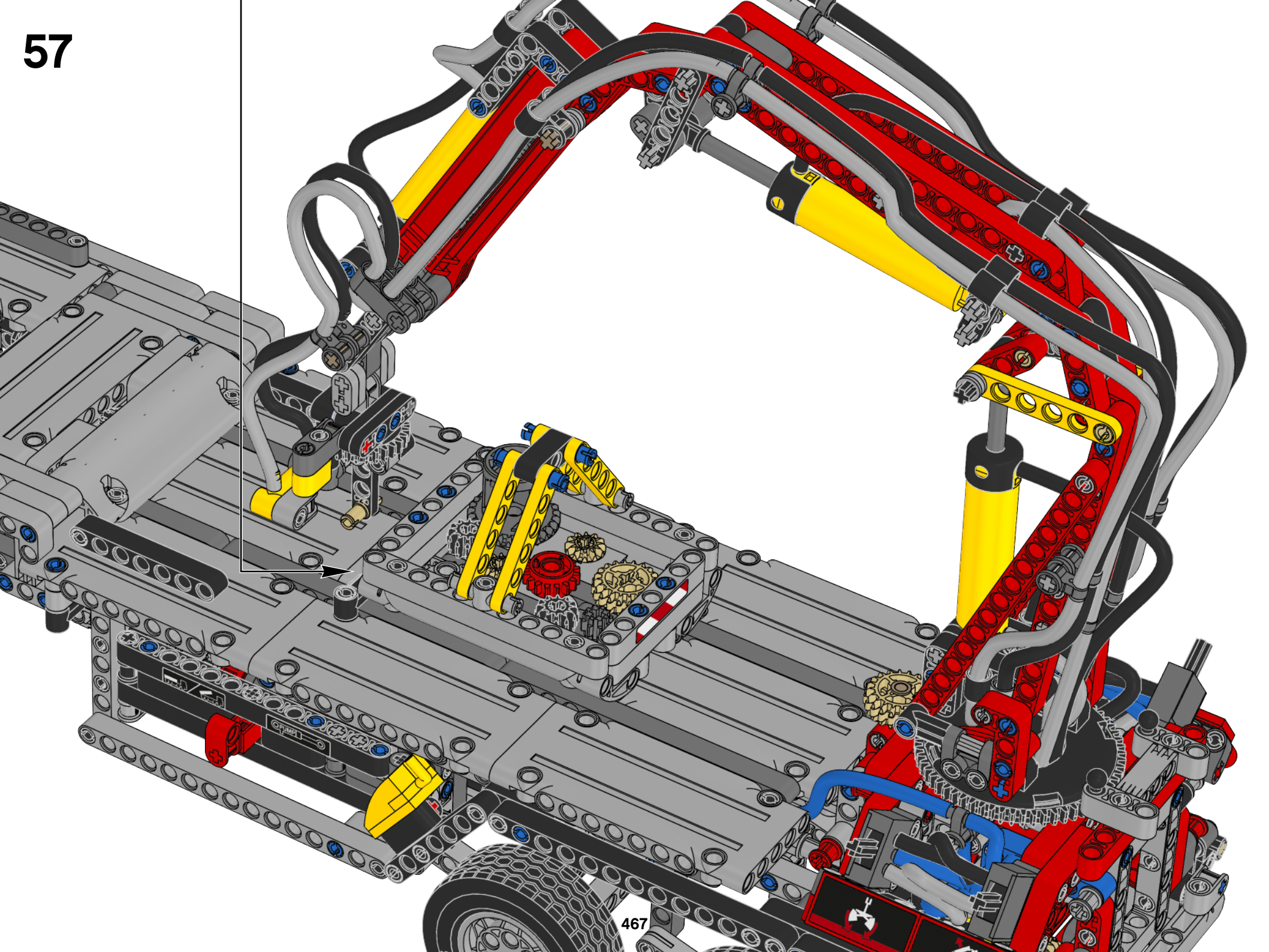

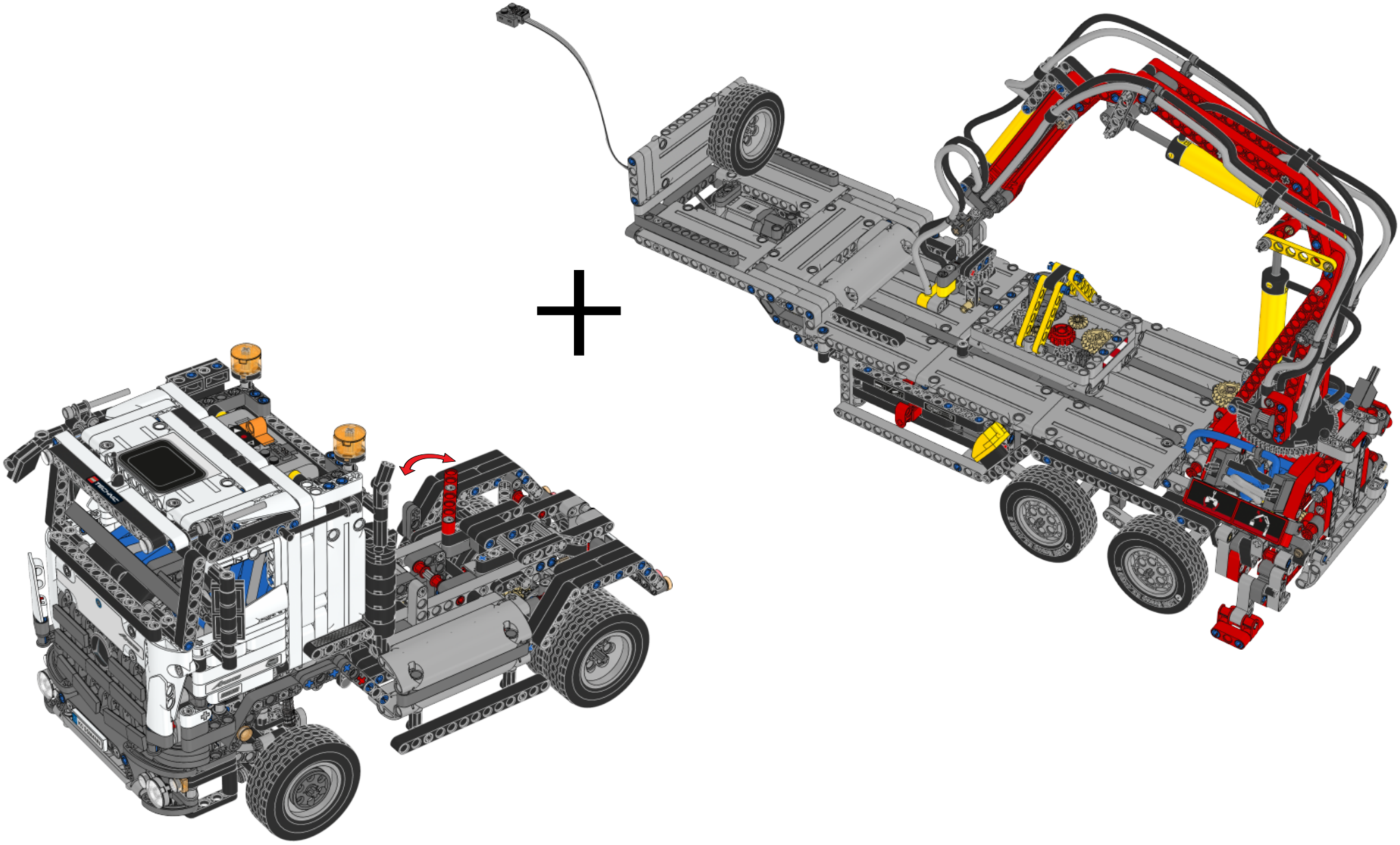

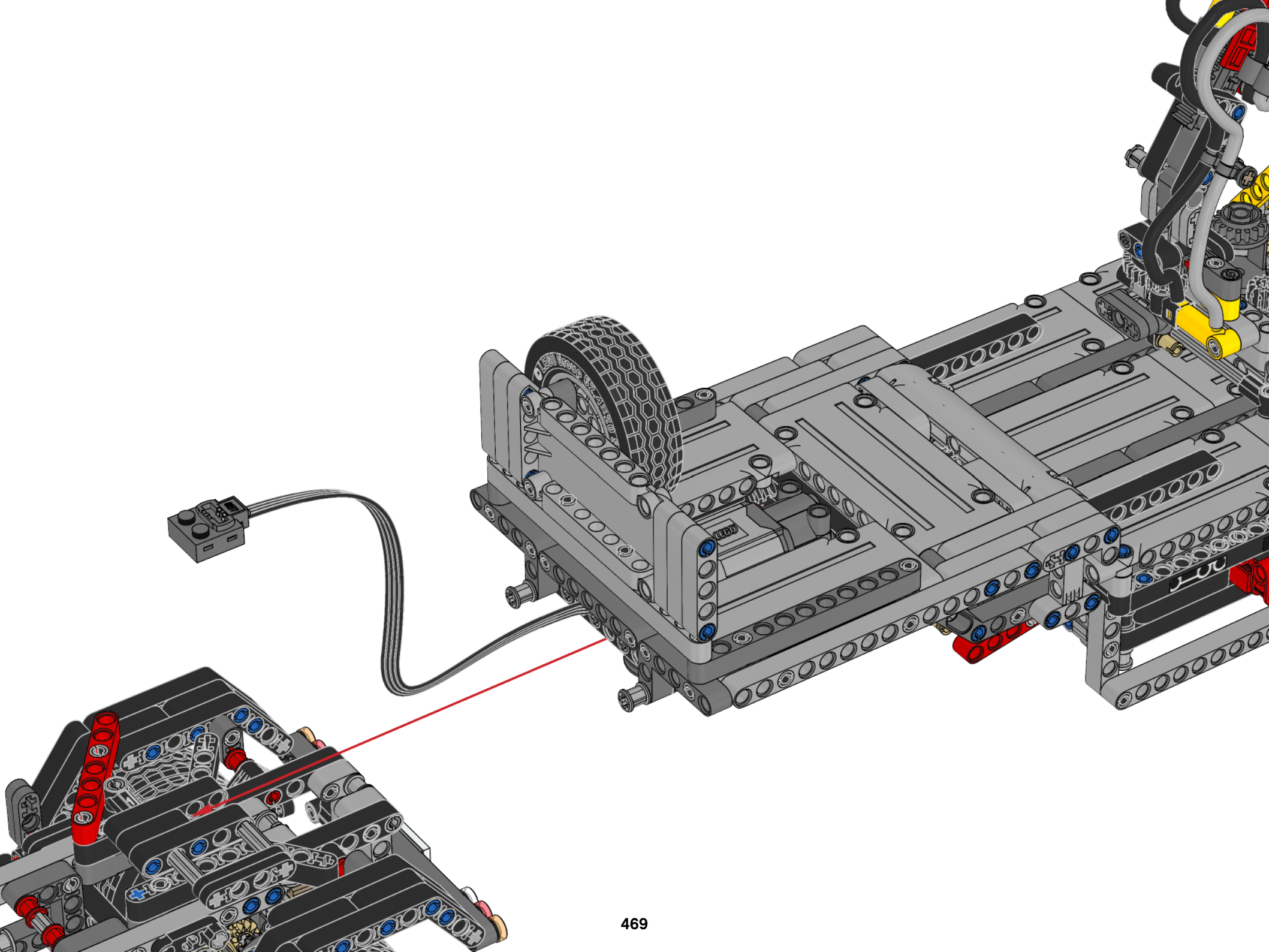

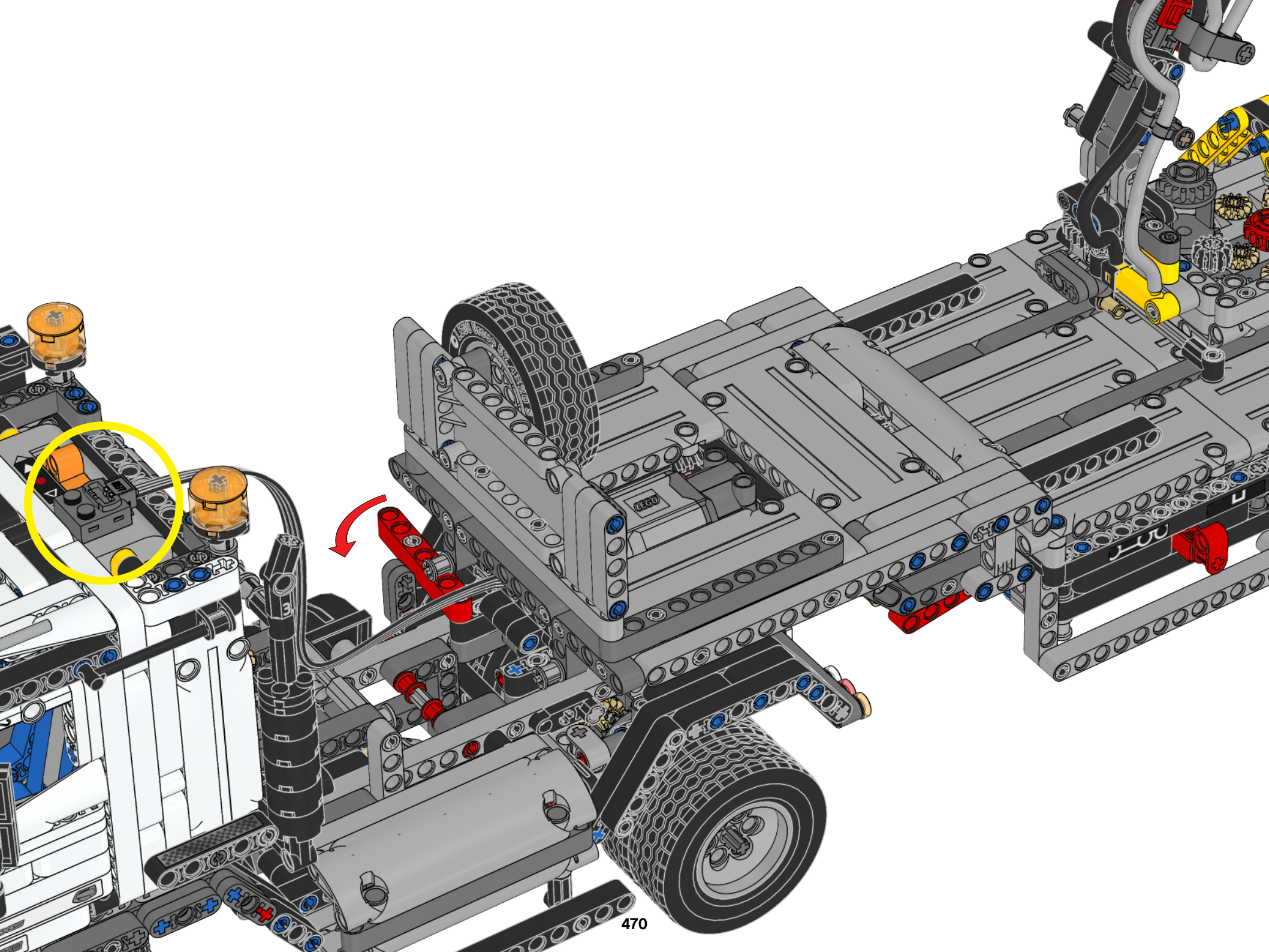

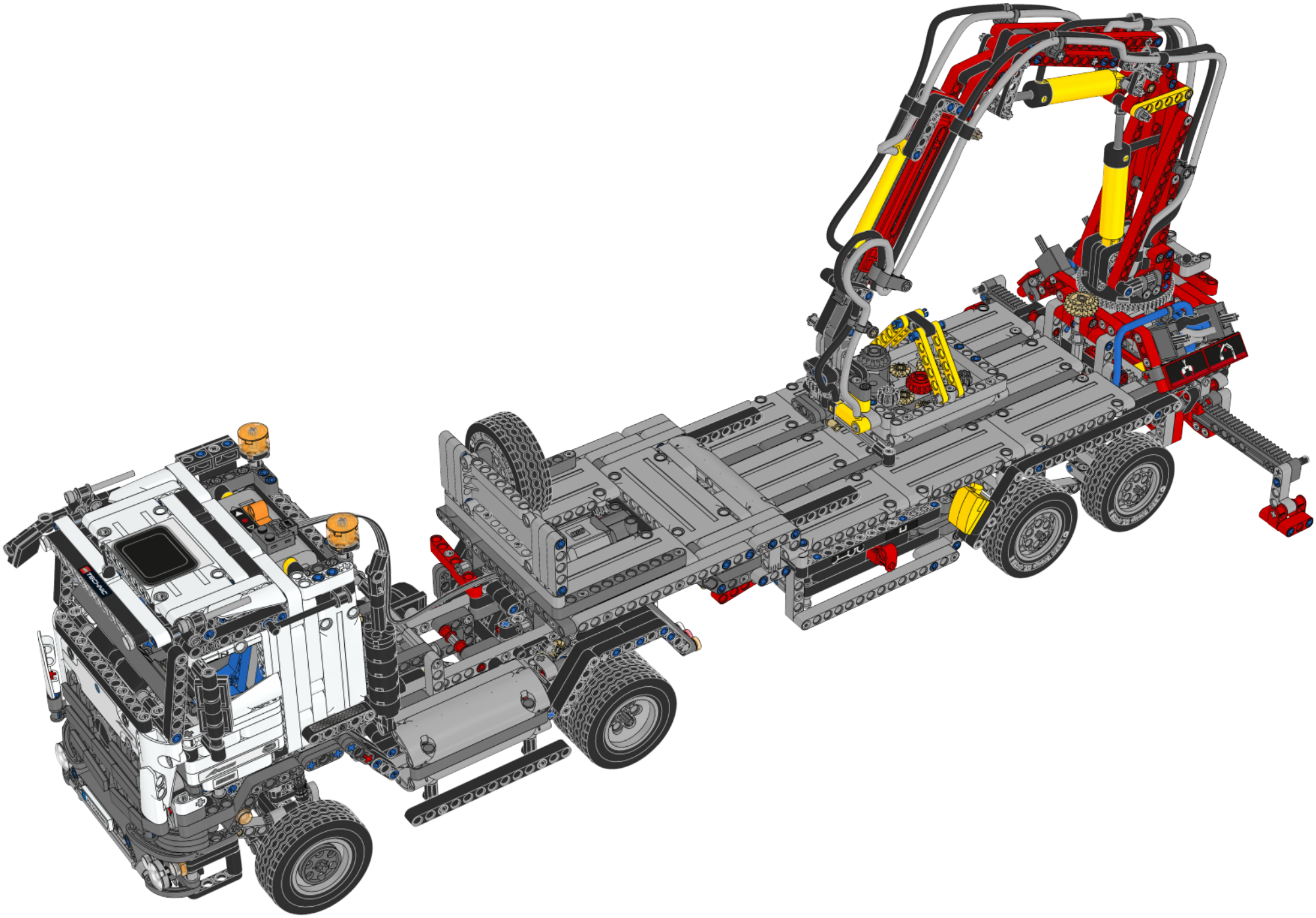

LEGO and the LEGO logo are trademarks of the/sont des marques de commerce du/son marcas registradas de LEGO Group. ©2015 The LEGO Group.

The trademarks “Mercedes-Benz” and “Three pointed star in a ring” as well as the design of the enclosed product are subject to intellectual property protection owned by Daimler AG. They are used by LEGO System A/S under license.
Les marques de commerce « Mercedes-Benz » et « l'étoile à trois pointes dans un cercle » ainsi que le design du produit sont soumis à la protection des droits de propriété intellectuelle détenus par Daimler AG. Ils sont utilisés par LEGO System A/S sous licence.
La marca comercial “Mercedes-Benz” y la “estrella de tres puntas inscrita en un anillo”, así como el diseño del producto adjunto, se encuentran sujetos a derechos de propiedad intelectual en posesión de Daimler AG. Uso por LEGO System A/S con autorización.